Unignited DisCha-Experiments (WP3.1a)

A. Friedrich, A. Veser, G. Necker, N. Kotchourko July 23rd 2020

Pre-normative REsearch for Safe use of Liquid HYdrogen

E3.1a Small Scale Multiphase Release
(DisCha-Facility)

- **General aim**
  - Investigation of blow-down behavior of cryogenic hydrogen stored at elevated pressure.
  - DisCha facility is utilized to investigate releases of cryogenic hydrogen at temperatures of approximately 80 K and pressures up to 200 bar (and similar releases at ambient temperature for comparison).
  - The main purpose of the tests is to provide validation or reference data for
    - models defining or using a discharge coefficient,
    - subsequent explosion tests, where the released gas is ignited (see E5.2), and
    - electrostatic field excitation and associated ignition potential of high pressure hydrogen gas jets at cryogenic temperatures (see E4.2).

E3.1a Small Scale Multiphase Release
(DisCha-Facility)

- **Overview Experimental Setup UNIGNITED DisCha-Experiments (WP3.1a)**

- complete facility installed in tent behind main hall of KIT-HyKA,
- three sides of tent surrounded by wall of concrete bricks
- control and data acquisition in container,
- during experiments sides of tent open,
- two experimental series:

Tests at ambient temperature

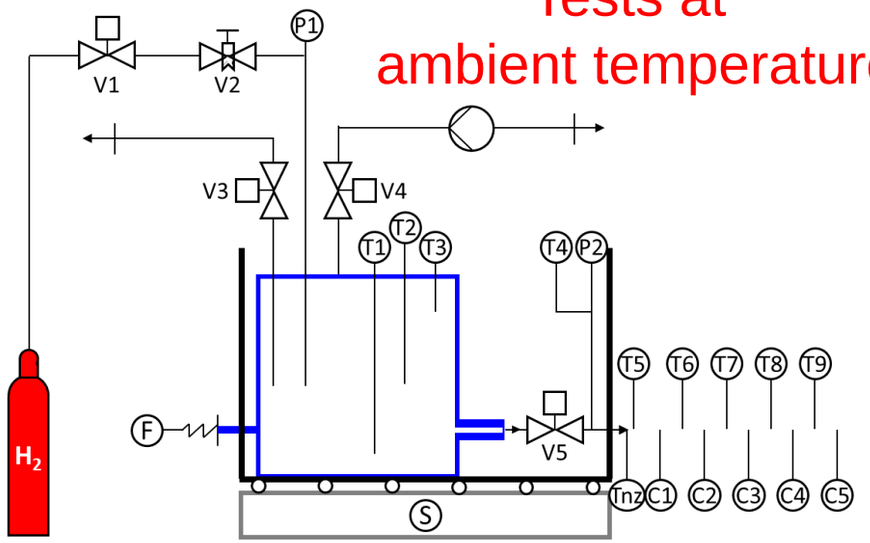

Tests at 80 K
(LN2 boiling temperature)

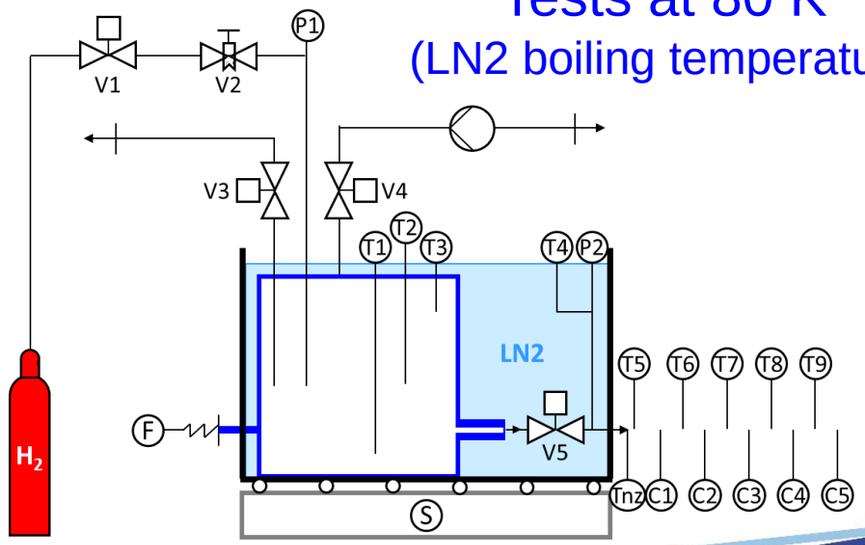

E3.1a Small Scale Multiphase Release
(DisCha-Facility)

- Main features of the DisCha pressure vessel:
  - stainless steel vessel
    (steel 1.4571, D_i = 160 mm, H_i = 140 mm, V = 2.81 dm³)
  - Lid equipped with
    - 1 central port for filling,
    - 2 further ports for evacuation & depressurization,
    - 3 rows with 3 ports for thermocouples with tubes for positioning in different heights
      (top, middle, bottom, angle between rows 120°).
  - Circumference equipped with:
    - 2 ports for nozzles in different heights
      (only lower port used),
    - 1 rod opposite to nozzle ports for connection with force sensor.
  - Designed for gaseous releases from pressures up to 200 bar at temperatures down to 80 K
    (LN_2 boiling temperature).

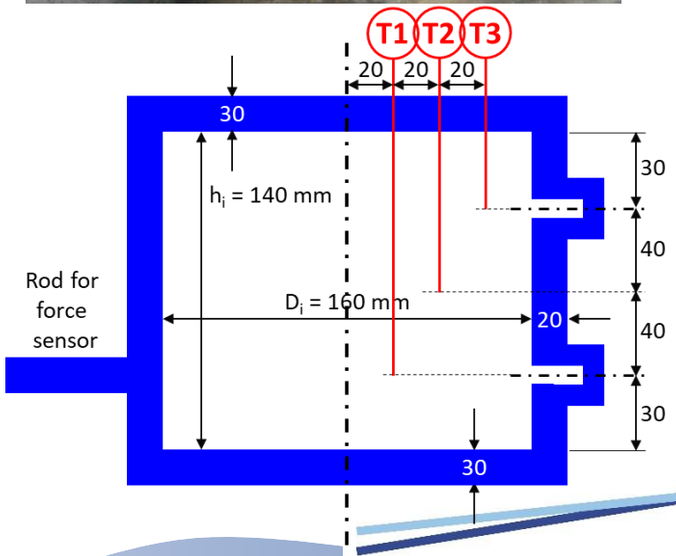

E3.1a Small Scale Multiphase Release
(DisCha-Facility)

- Release (inner) Diameters:
  - Vessel exit: 12 mm
  - Connection: 10 mm
  - Valve: approx. 9 mm
  - Extension: 10 mm
  - Nozzle: 10 mm
  - Aperture: 0.5, 1, 2 and 4 mm

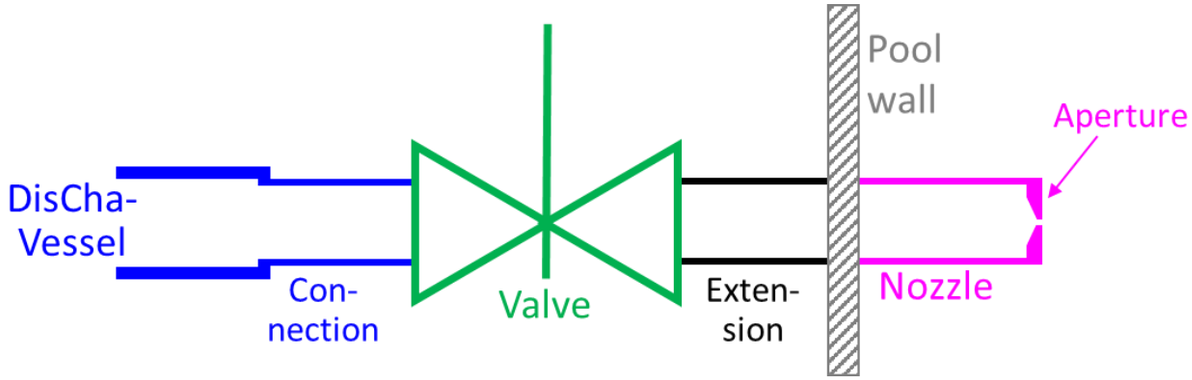

- Nozzle Properties:

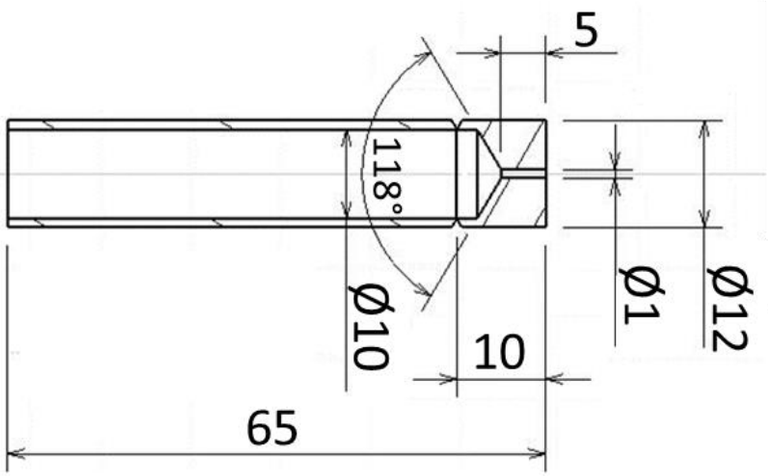

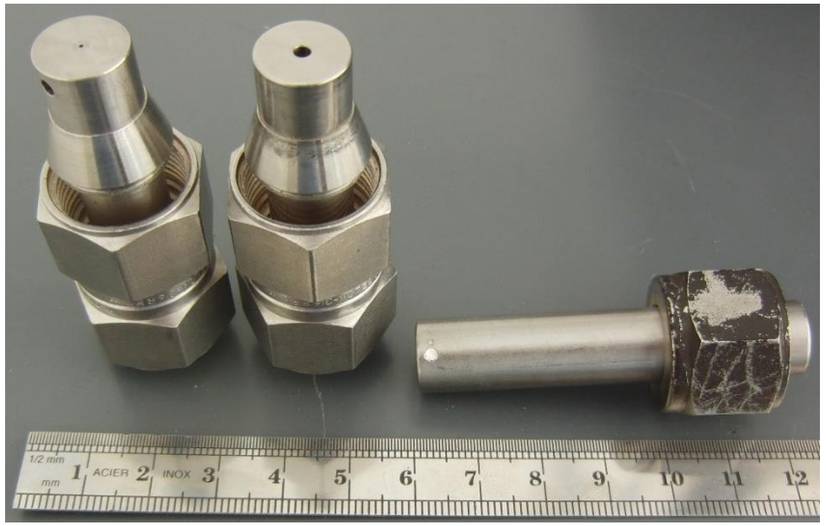

  - Nozzle shape: only circular apertures.

E3.1a Small Scale Multiphase Release

Instrumentation of the DisCha-facility

- **Optical Instrumentation**
  - 2 Photo-cameras (Canon EOS5D Mark I & II)
  - 1 Panasonic video camera

Operated and processed by CoStudy

	Camera 1 (Mark I)	Camera 2 (Mark II)
Lens type	Tele	Wide angle
Resolution [pix]	4368 x 2912	5616 x 3744
Object dist. [m]	0.9	1.1
Image size [m]	0.33 x 0.22	1.45 x 0.97
BOS-procedure	Color BOS	Black-white BOS

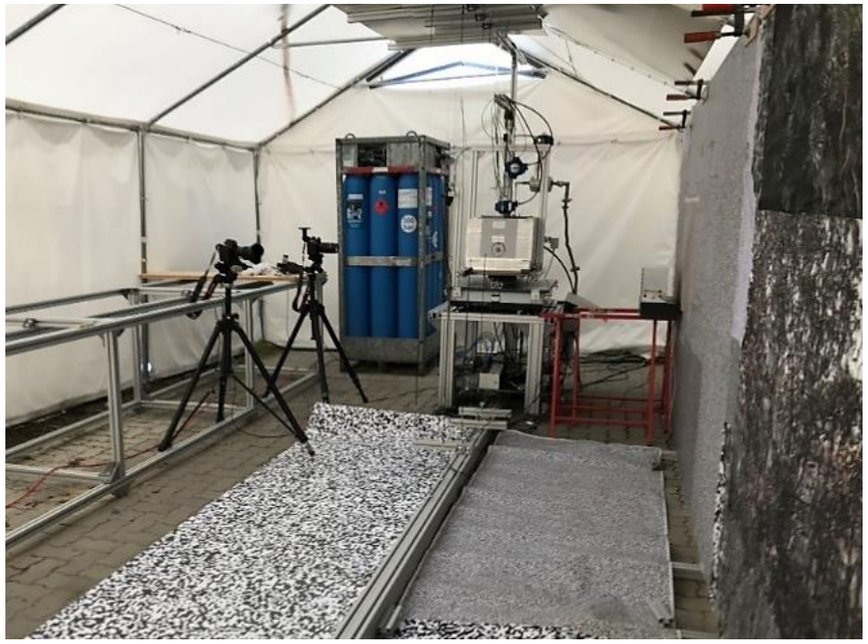

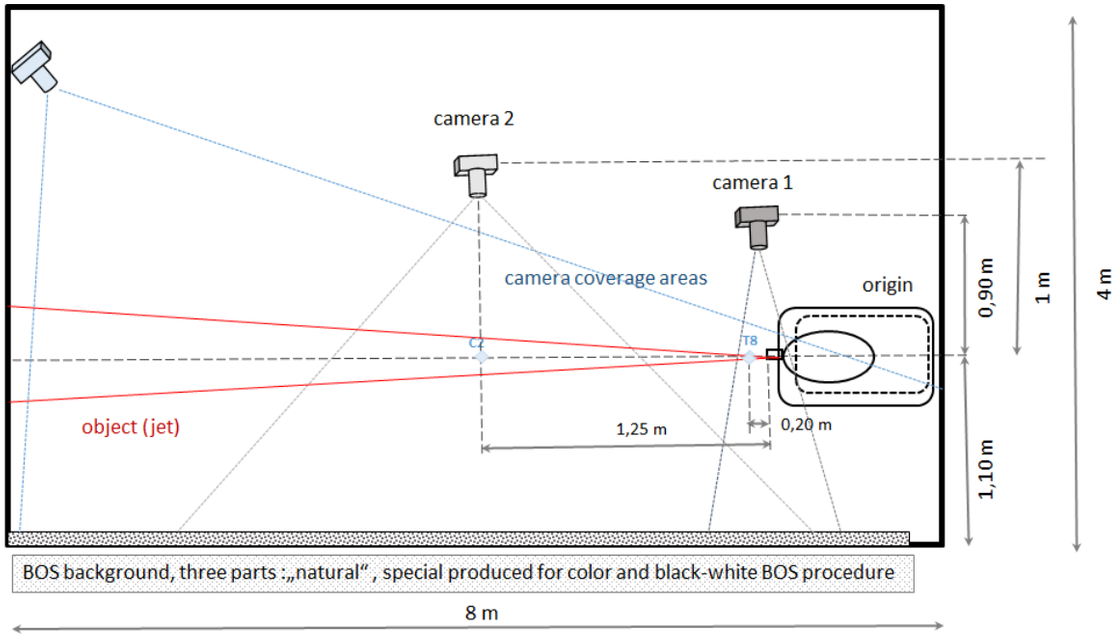

E3.1a Small Scale Multiphase Release

Instrumentation of the DisCha-facility

- **Camera 1: processing conditions and BOS outcome**

- BOS - processing conditions:
  - color BOS with number of colors 7
  - interrogation area 8 pix; 16 pix
  - step 1 pix
  - Resolution area 0.6 mm - 1.2 mm
- Additional functions:
  - denoising
  - equalizing
  - weight function
  - 1D or 2D Gaussian sub-pixel function

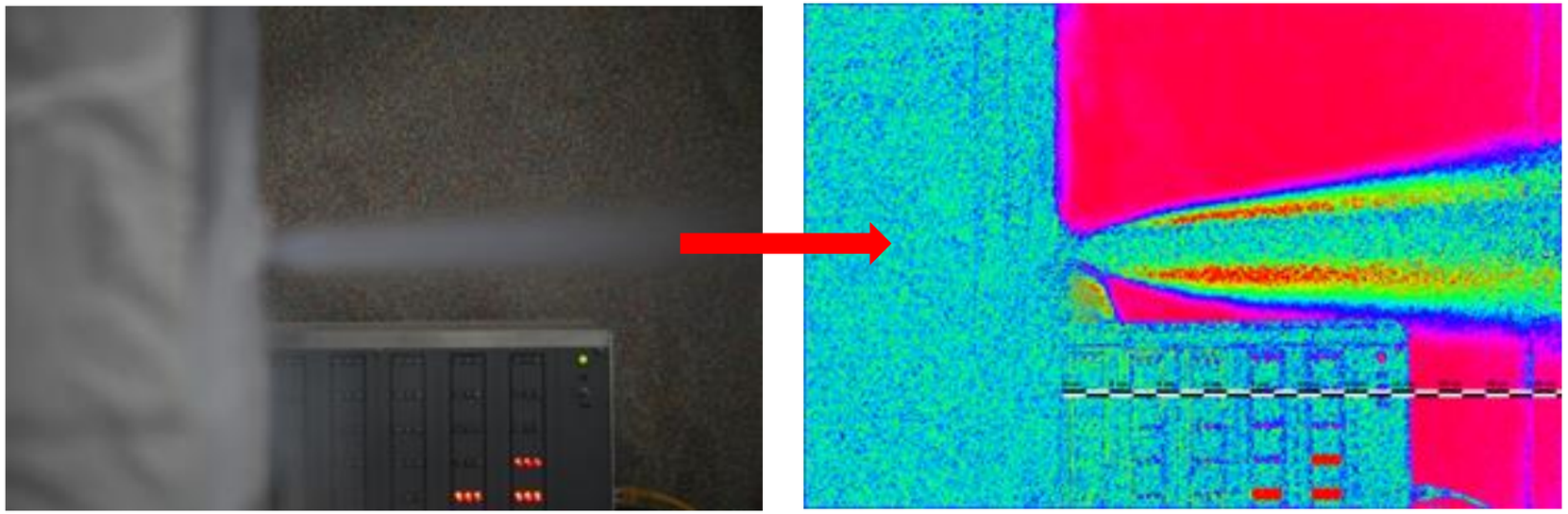

E3.1a Small Scale Multiphase Release

Instrumentation of the DisCha-facility

- **Camera 2: processing conditions and BOS outcome**

- BOS - processing conditions:
  - black-white BOS
  - interrogation area 16 pix; 24 pix; 32 pix
  - step 1 pix
  - Resolution area 4 mm - 8 mm

- Additional functions:
  - denoising
  - weight function
  - 1D or 2D Gaussian sub-pixel function

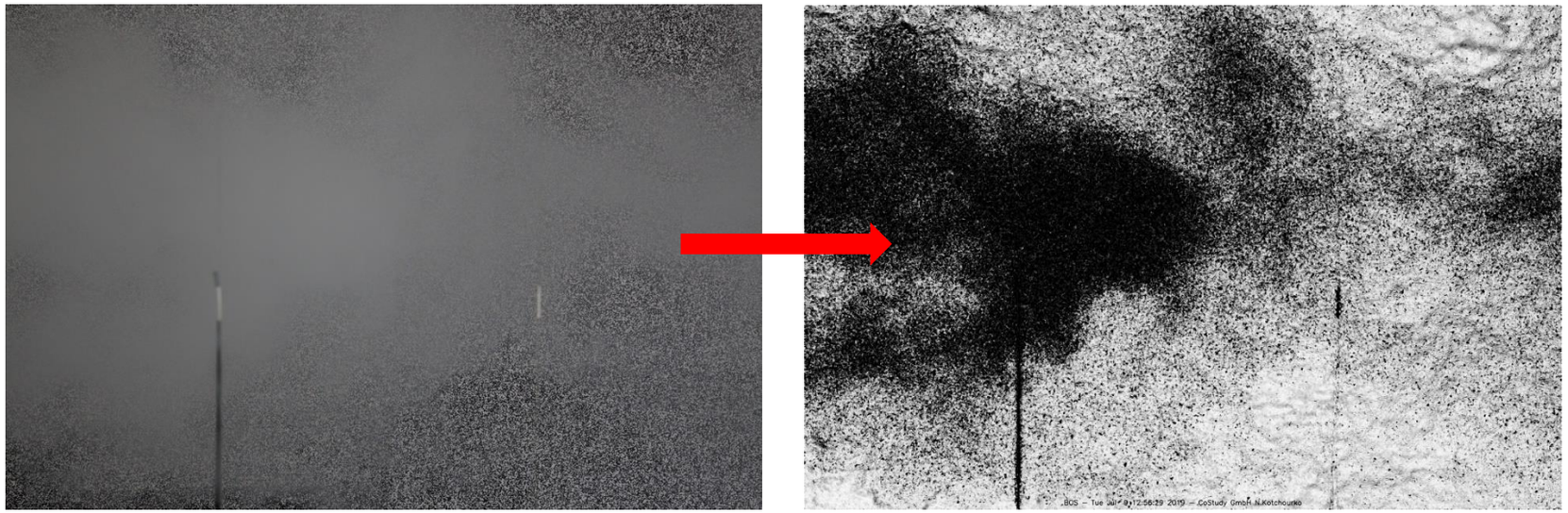

E3.1a Small Scale Multiphase Release

Instrumentation of the DisCha-facility

- **Examples for BOS-Images**
  - Camera arrangement 1

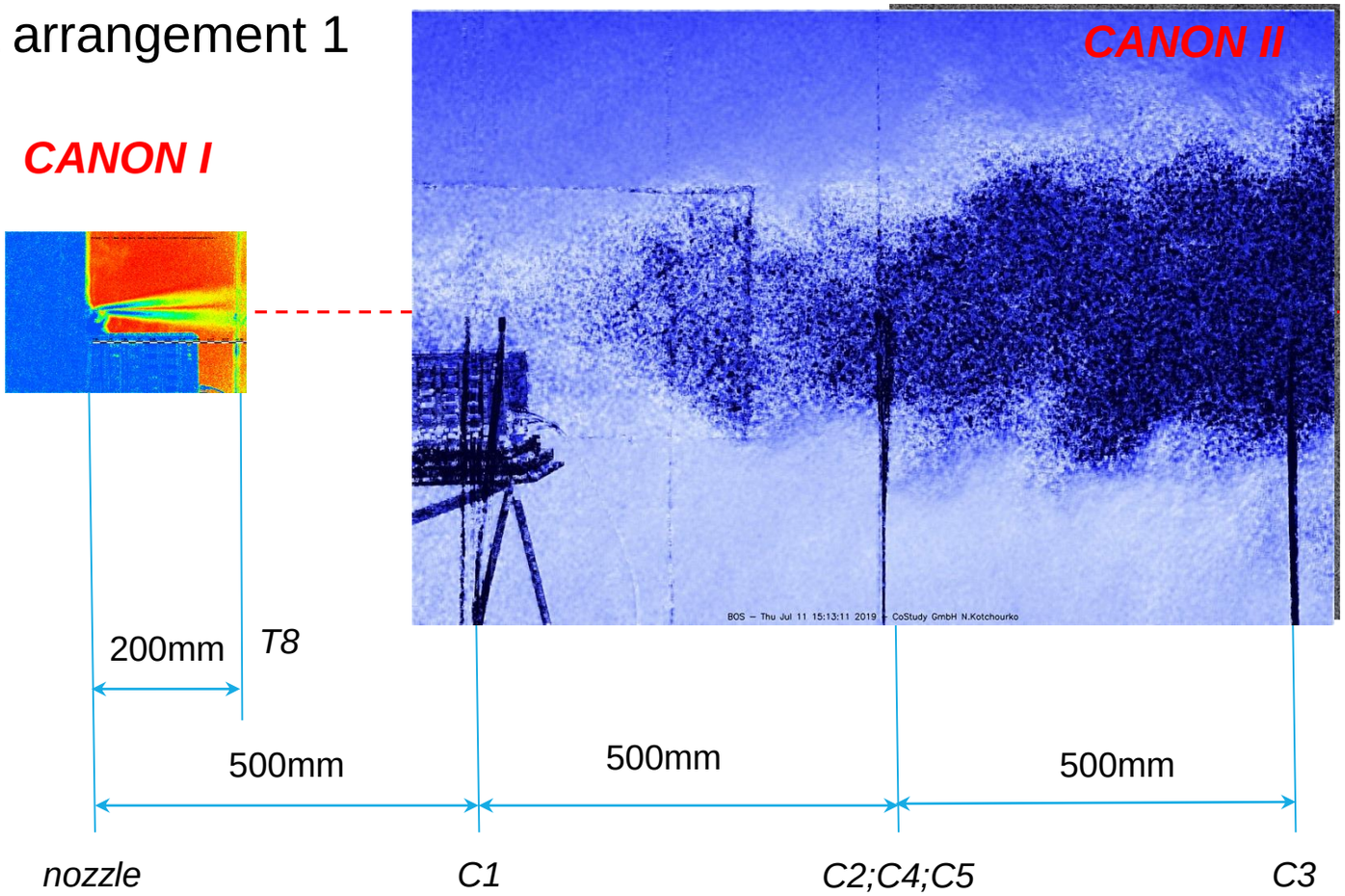

E3.1a Small Scale Multiphase Release

Instrumentation of the DisCha-facility

- **Pressure measurements**
  - **P1 (= P_{ves})** Initial pressure inside the vessel,
  - **P2 (= P_{noz})** Pressure inside release line,
  - Both sensors of same type:
    Manufacturer: WIKA, Type: S-20,
    Range: 0 - 250 bar(rel.), Accuracy: < 0.125 % FS.
  - Both pressures measured in tubes connected to vessel/release line to avoid temperature effects on the sensors in cold experiments.

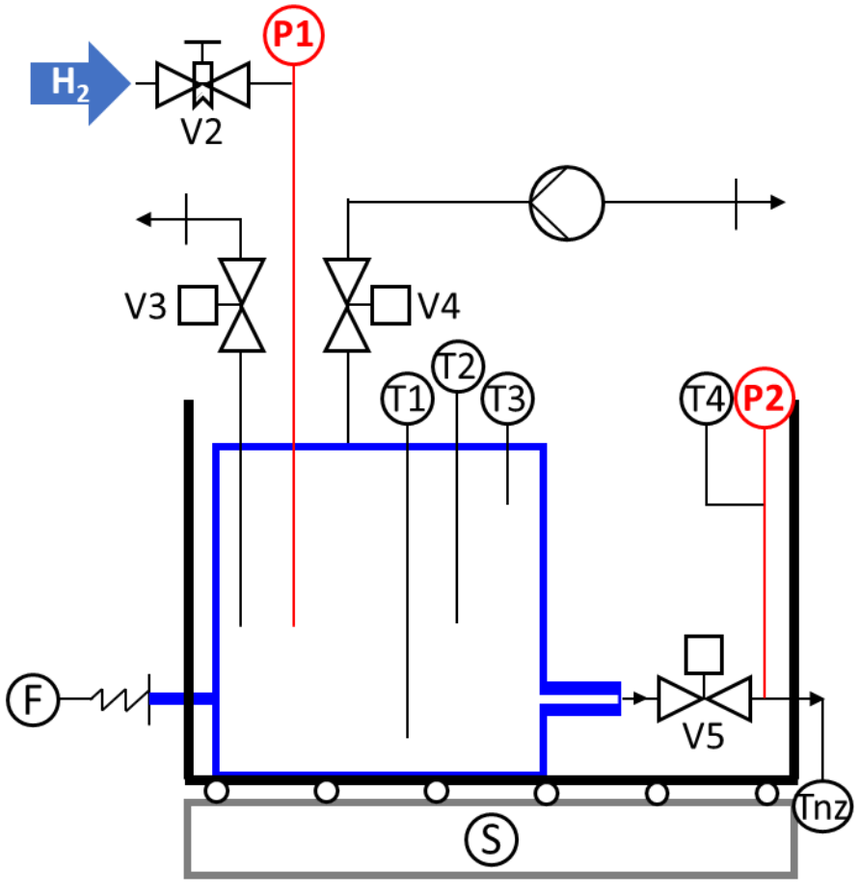

Both pressures recorded fast (2 kHz, Excel-sheet *Date_time*-Press) and slow (10 Hz, *Date_time*-cH2-Amb) together with the signals of H2-concentrations, ambient conditions and field mill signals for synchronization.

E3.1a Small Scale Multiphase Release

Instrumentation of the DisCha-facility

- **Pressure measurements**
  - Initial pressure (P1)
    - Interval of 5 s prior to opening of release valve was used to determine initial pressure value inside the vessel (Cell F2 in Sheet “Press”).
  - Pressure inside release line (P2)
    - First pressure increase inside release line is best available method to determine beginning of experiment.
    - So point in time of this pressure increase was taken as zero for “synchronized time” scale given in column A of all sheets of an experiment.

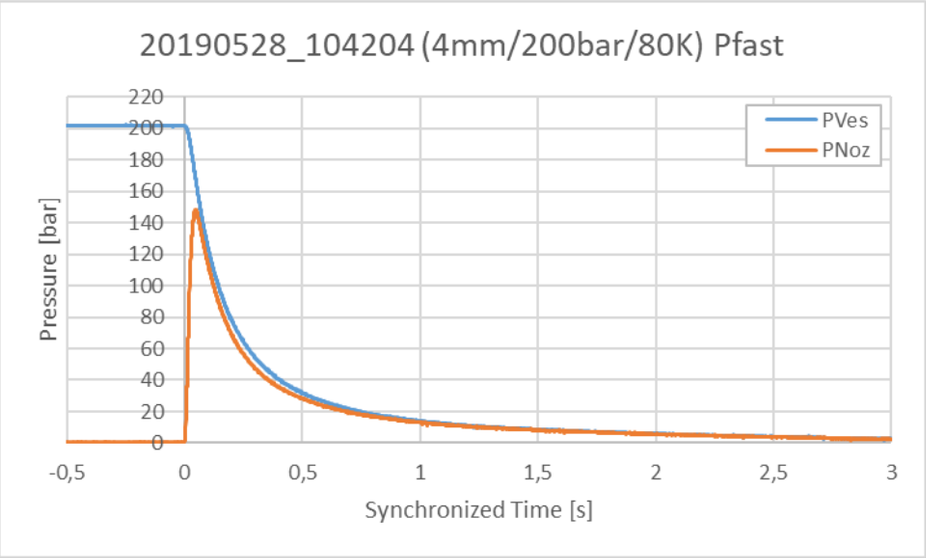

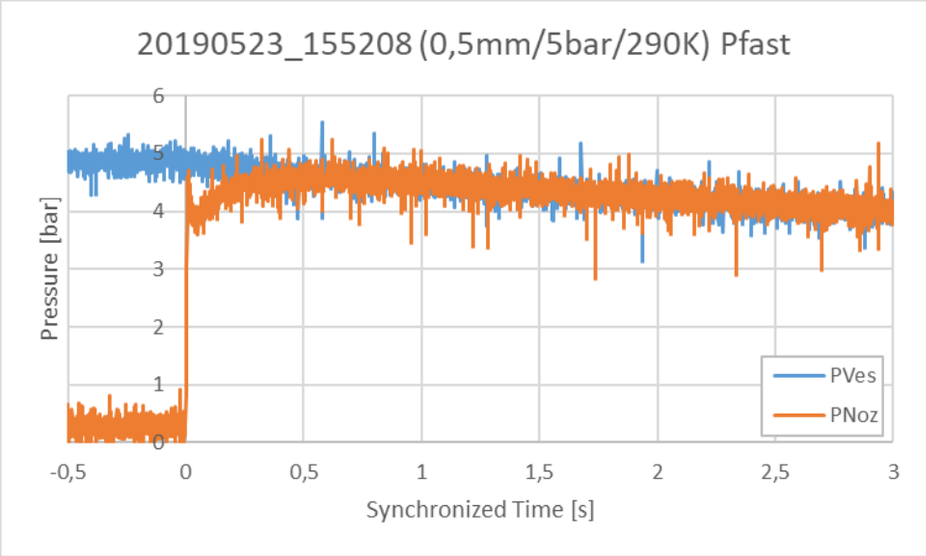

E3.1a Small Scale Multiphase Release

Instrumentation of the DisCha-facility

- **Force measurements**
  - **F** Repulsive force induced by the effusing hydrogen:
    Manufacturer: Althen, Type: ALF318CPR0K0,
    Range: 0 - 2 kN, Accuracy: ± 0,1 % FS.

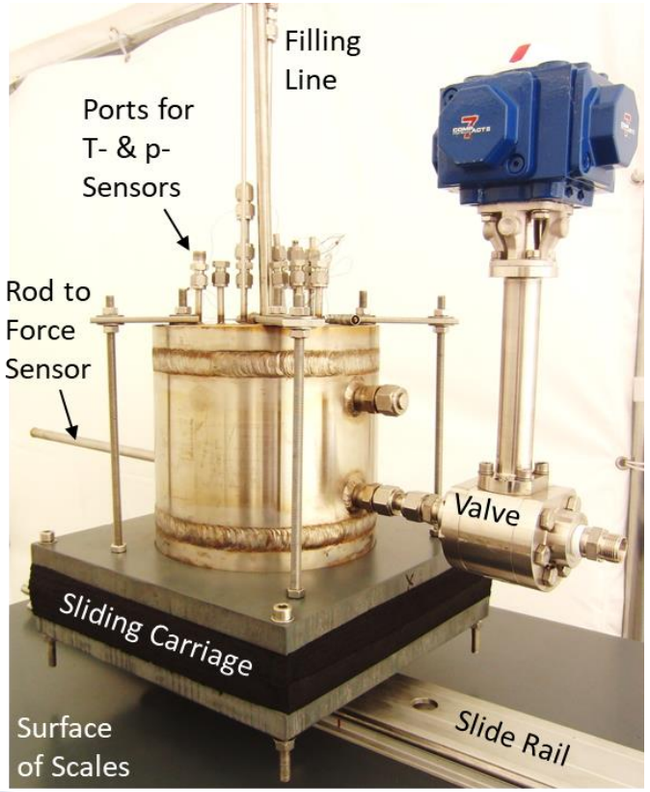

To enable force measurements the complete basin with DisCha-facility was mounted on sliding carriage that allows almost frictionless movement of the facility. Nevertheless force measurements are very sensitive to all movements of the facility.

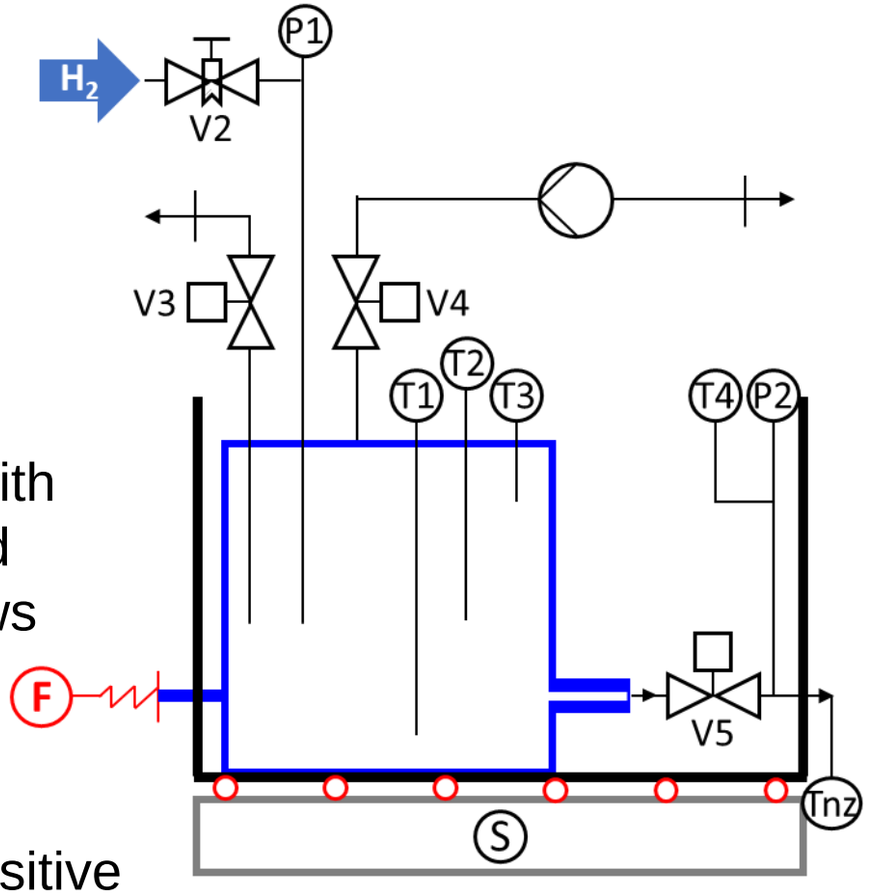

Force recorded at 10 Hz (sheet *Date_time*-cH2-Amb) together with slow pressure records and H2-concentrations.

E3.1a Small Scale Multiphase Release

Instrumentation of the DisCha-facility

- **Force measurements**
  - Force measurements in experiments with high initial pressures and large nozzle diameters mostly show reasonable results,
  - In some cases, especially for low initial pressures and small nozzle diameters, no signal was recorded at all.

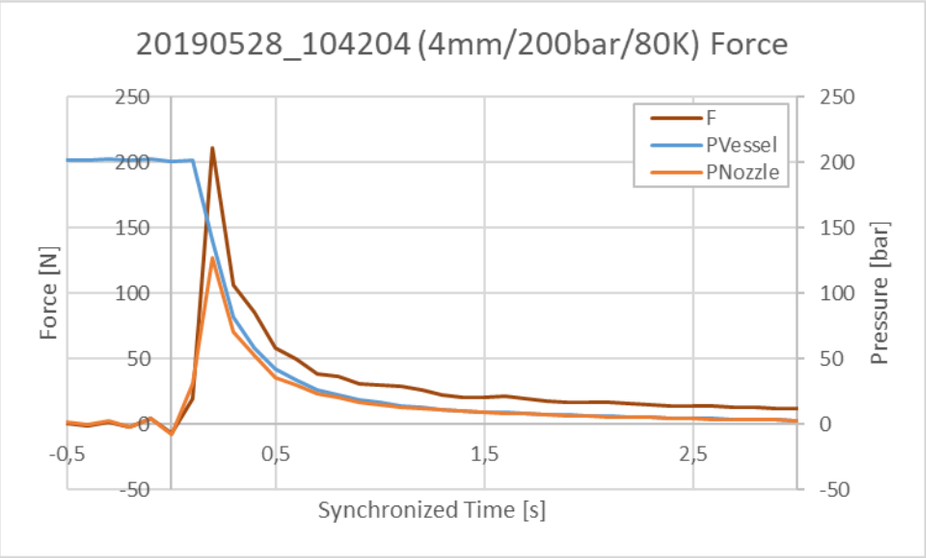

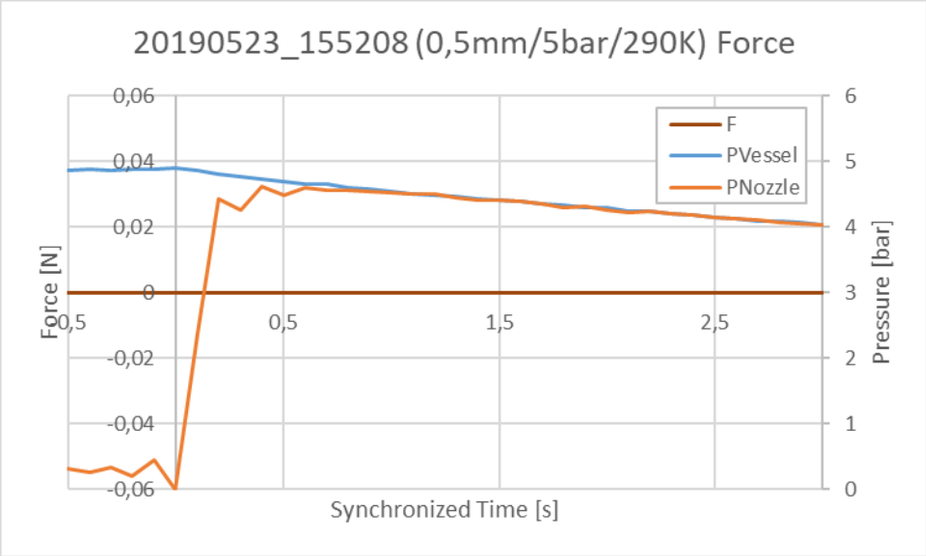

E3.1a Small Scale Multiphase Release

Instrumentation of the DisCha-facility

- **Weight measurements**
  - **S** Weight of complete basin with DisCha-facility:
    Manufacturer: Mettler-Toledo, Type: PBA430x
    Range: 0 - 150 kg, Accuracy: 0.006% FS.

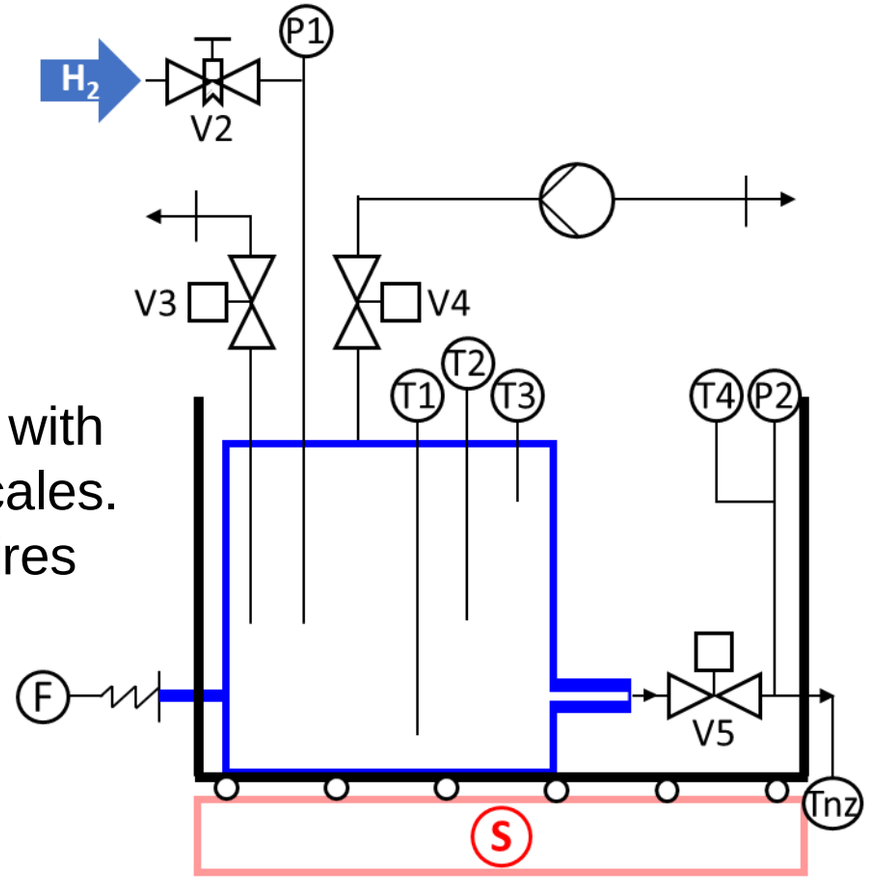

To enable weight measurements the complete basin with DisCha-facility and sliding carriage was placed on scales. Many efforts were made to eliminate influences of wires and hoses.
Nevertheless weight measurements are very sensitive to all movements of the facility, especially when pneumatic valves are activated.

Weight measurements had to be recorded separately due to output format of scales. Maximum measurement frequency of scales is 2 Hz, no changes possible due to lack of possibility to change weighing procedure performed by scales interface.
Scales records in separate sheet *Date_time*-Weight.

E3.1a Small Scale Multiphase Release

Instrumentation of the DisCha-facility

- **Weight measurements**
  - Weight changes in experiments with low initial pressures not resolved by scales,
  - Influence of evaporating LN2 in cold experiments can be compensated,
  - action of pneumatic valve very often has influence on weight, difficult to compensate.

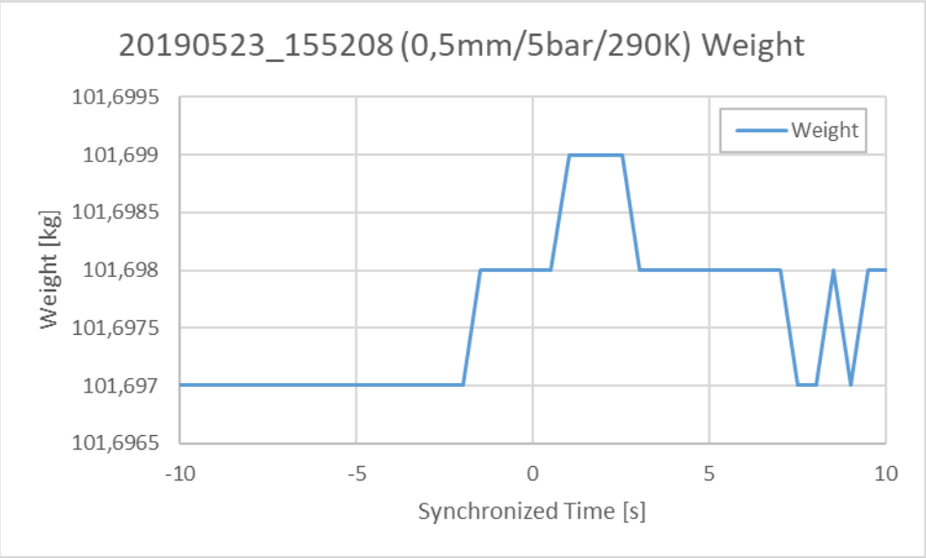

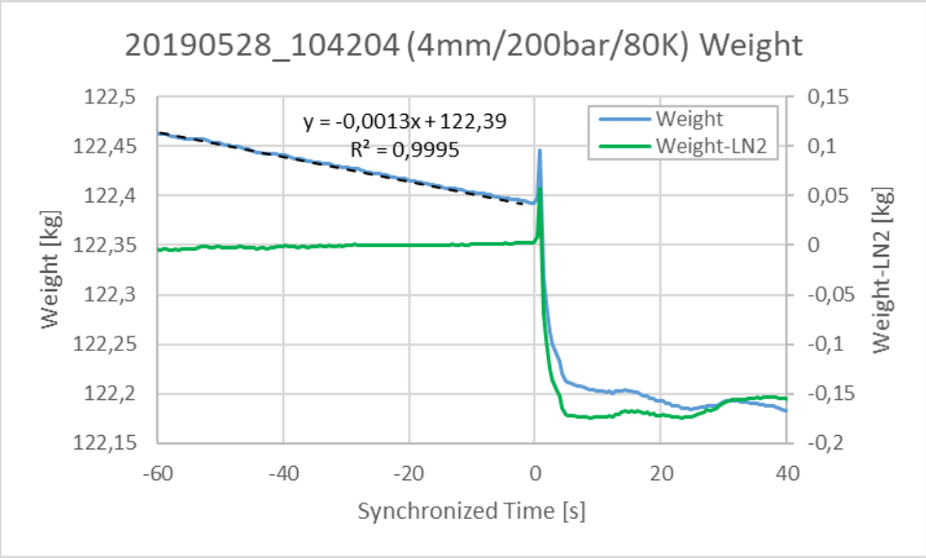

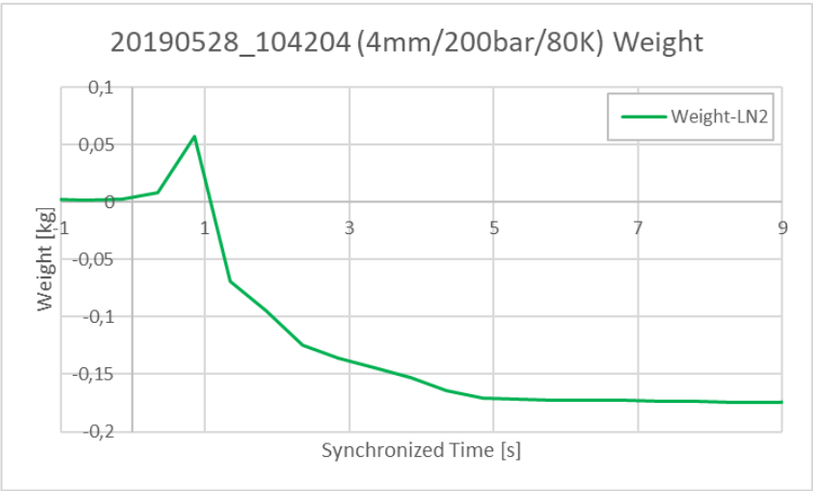

E3.1a Small Scale Multiphase Release

Instrumentation of the DisCha-facility

- **In-vessel temperature measurements**
  - **T1 – T3** Temperature of compressed gas in three different heights inside DisCha-vessel using thermocouples (TCs):
    Manufacturer: KIT-Workshop,
    Type: Type K, d = 0.25 mm Accuracy: 1.66 K.
  - **T1o – T3o** From earlier tests with DisCha one set of 3 open TCs remained (no longer available at KIT workshop) that were installed additionally with the aim of faster response time due to smaller diameter (0.14 mm) and open tip.

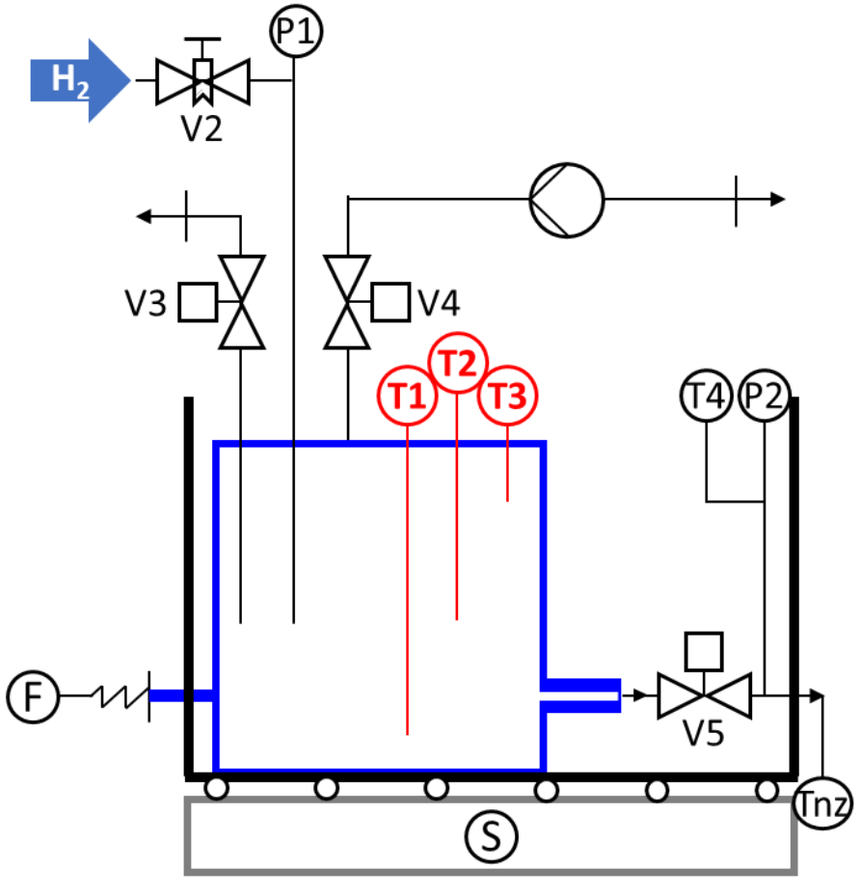

ALL Temperature measurements had to be recorded separately due to output format of interface. Maximum measurement frequency is 100 Hz. Due to interface also different starting time, so a trigger circuit was added as dummy temperature measurement. Temperature records in separate sheet *Date_time*-Temp.

E3.1a Small Scale Multiphase Release

Instrumentation of the DisCha-facility

- **Temperature measurements**
  - T1 – T3 (and T5 - T9 of same type) show good accuracy when exposed to LN2.
  - Measured value approx. 84K, which corresponds to an error of approx. +7 K.
  - Values of T1o – T3o show rather large deviation from LN2 temperature but might be useful for analysis of fast phenomena,
  - Performance of T1o – T3o most likely due to degradation (age approx. 10 years),
  - Performance of T1 – T3 at LH2-temperature tested later in Pool-facility:
    T1 shows mean temperature of approx. 26 K during exposure in LH2-pool.
    T2 behaves similarly (T2(LH2) ≈ 26 K)
    T3 slightly lower (T3(LH2) ≈ 19 K).

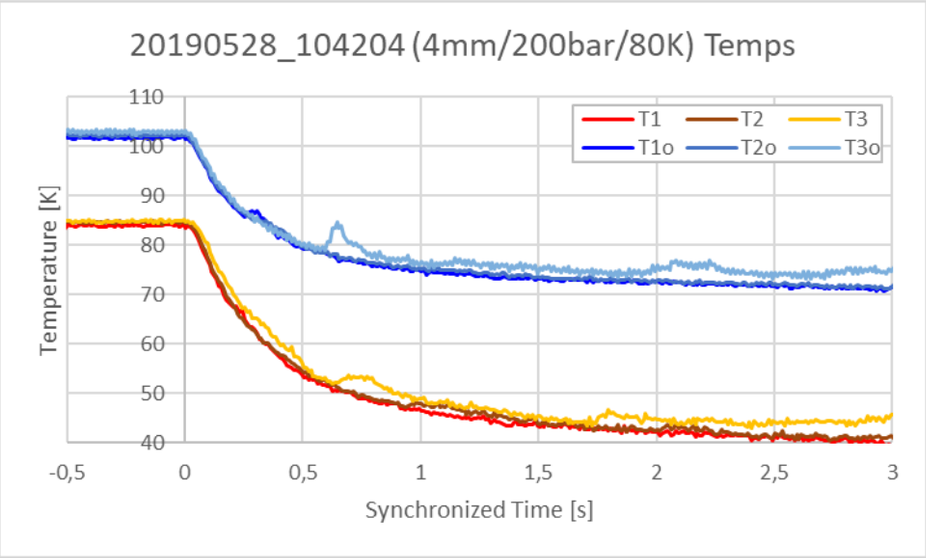

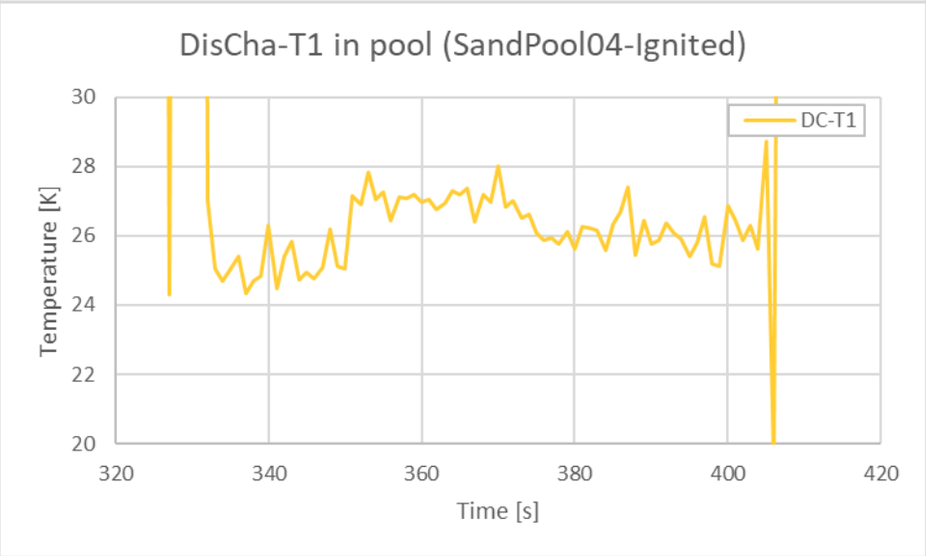

E3.1a Small Scale Multiphase Release

Instrumentation of the DisCha-facility

- **Ex-vessel temperature measurements (I)**
  - **T4** Temperature of gas in release line, welded into junction of tube for P2 and release line with **direct contact to effusing gas!**
    Manufacturer: KIT-Workshop,
    Type: Type K, d = 1.0 mm Accuracy: 1.66 K.

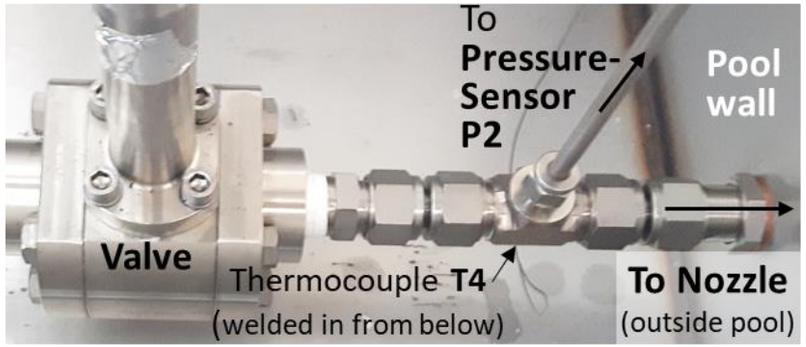

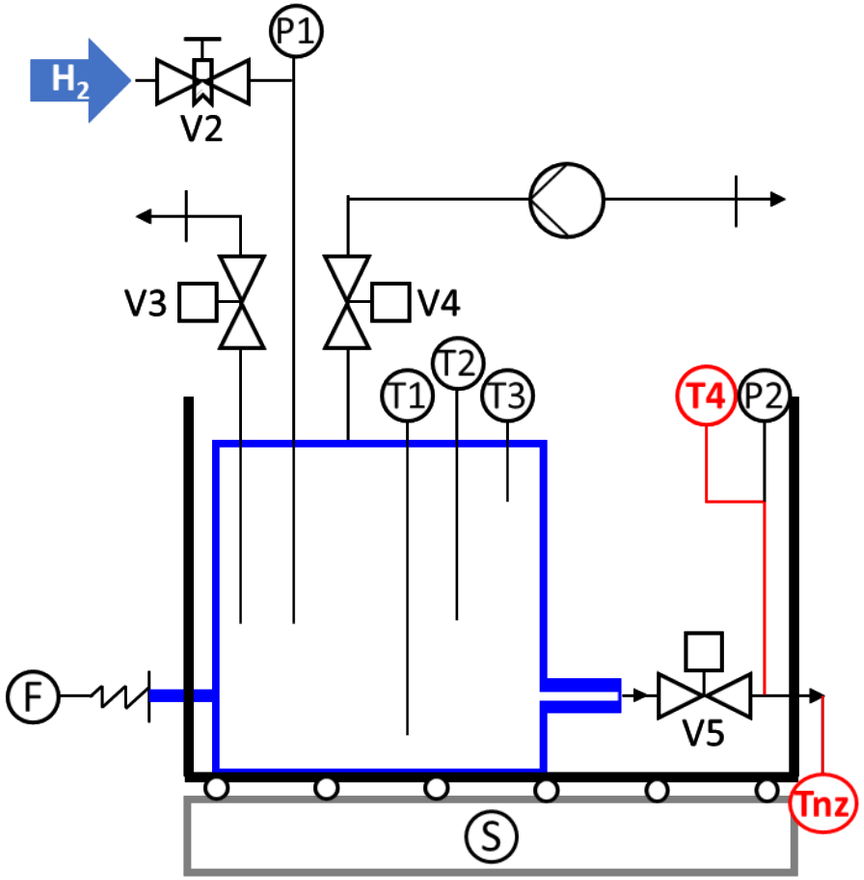

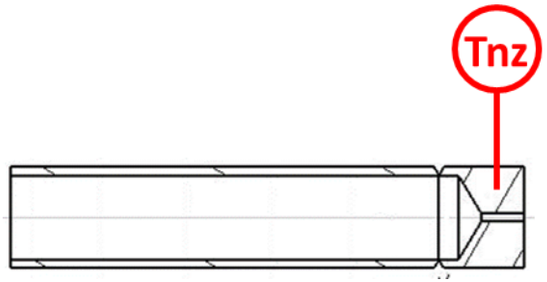

- **T_{nz}** Temperature in tiny hole in nozzle material.
  NO direct contact to effusing gas!
  Manufacturer: KIT-Workshop,
  Type: Type K, d = 1.0 mm Accuracy: 1.66 K.

E3.1a Small Scale Multiphase Release

Instrumentation of the DisCha-facility

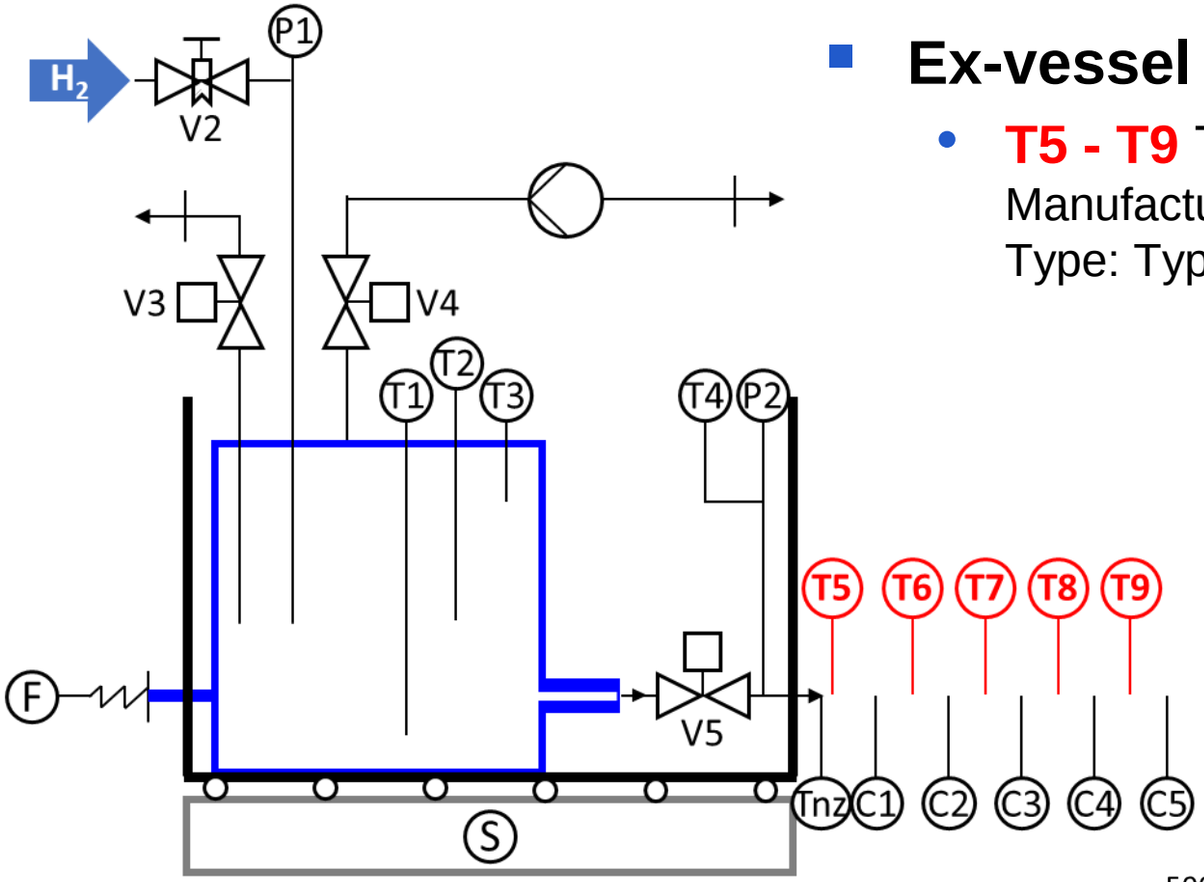

- **Ex-vessel temperature measurements (II)**
  - **T5 - T9** Temperature of released gas in jet.
    Manufacturer: KIT-Workshop,
    Type: Type K, d = 0.25 mm Accuracy: 1.66 K.
  - TCs positioned at measurement location via tiny vertical wires,
  - All measurement positions in vertical plane of jet,
  - T8 and T9 slightly below and above jet axis

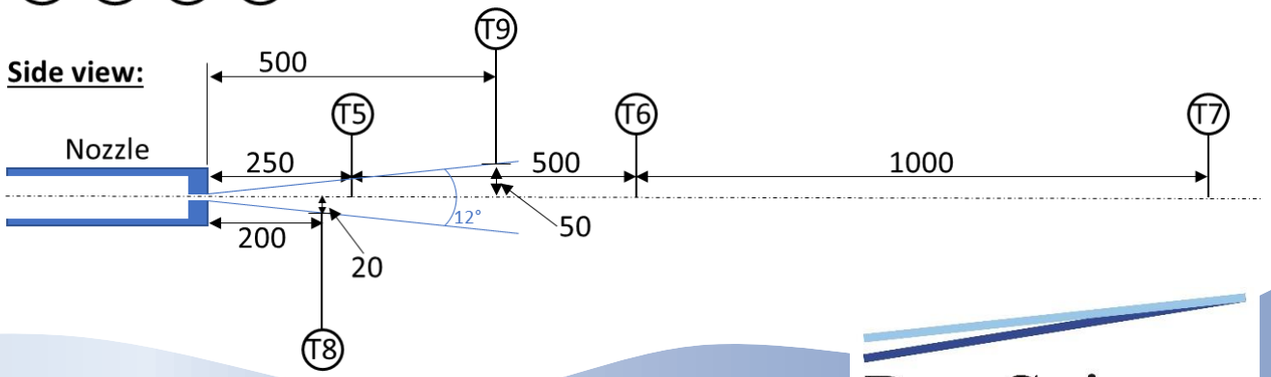

E3.1a Small Scale Multiphase Release

Instrumentation of the DisCha-facility

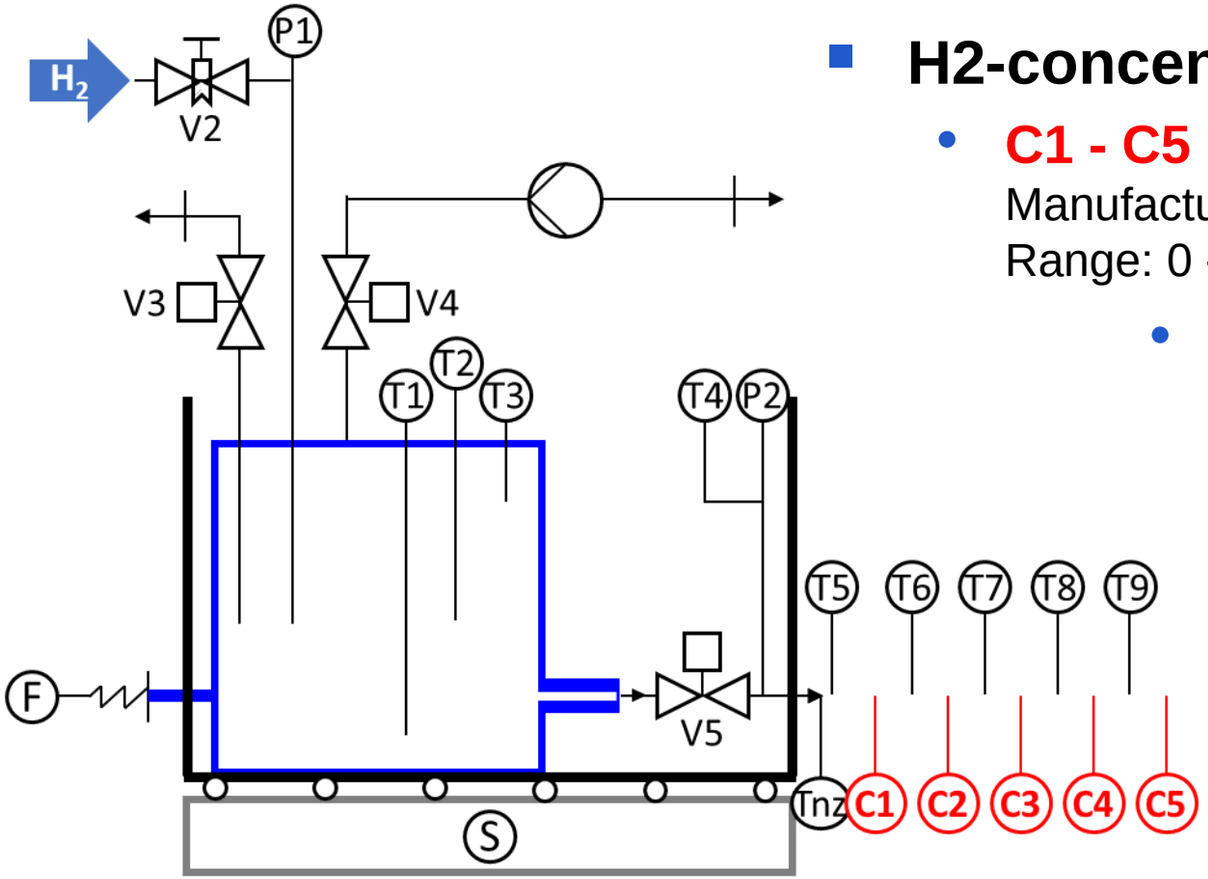

- **H2-concentration measurements**
  - **C1 - C5** H2-concentration in jet.
    Manufacturer: Messkonzept, Type: FTC300,
    Range: 0 - 100 Vol% H2, Accuracy: < 1% FS.
    - Tubes for sampling positioned at measurement location via tiny vertical wires.

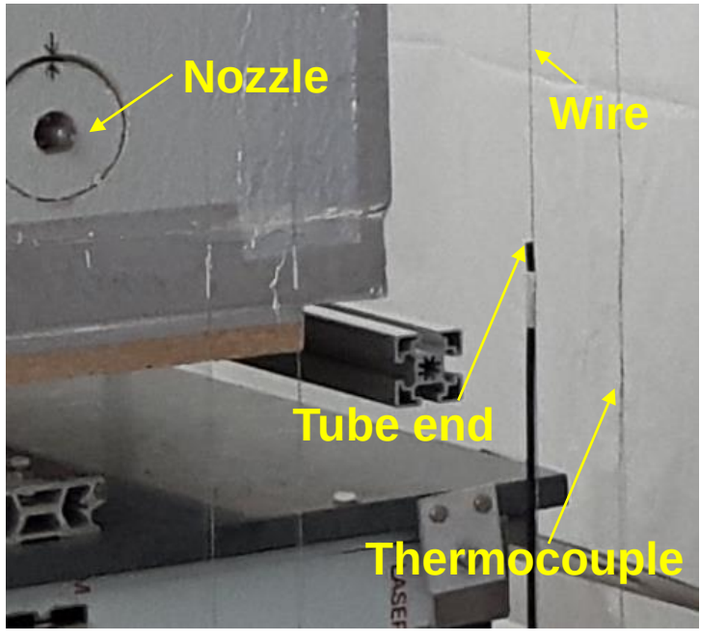

E3.1a Small Scale Multiphase Release

Instrumentation of the DisCha-facility

- **H2-concentration measurements**
  - Procedure: Gas samples are continuously transported from sampling position to sensor through tiny plastic tube (di = 2.5 mm, l = 3.0 m) by pump downstream from the sensor (one pump for all sensors),
  - Sensor measures H2-concentration continuously, but with some time delay,
  - Tests were made to quantify time delay, dt to first reaction of signal after opening of valve is approx. 2 s for all sensors.

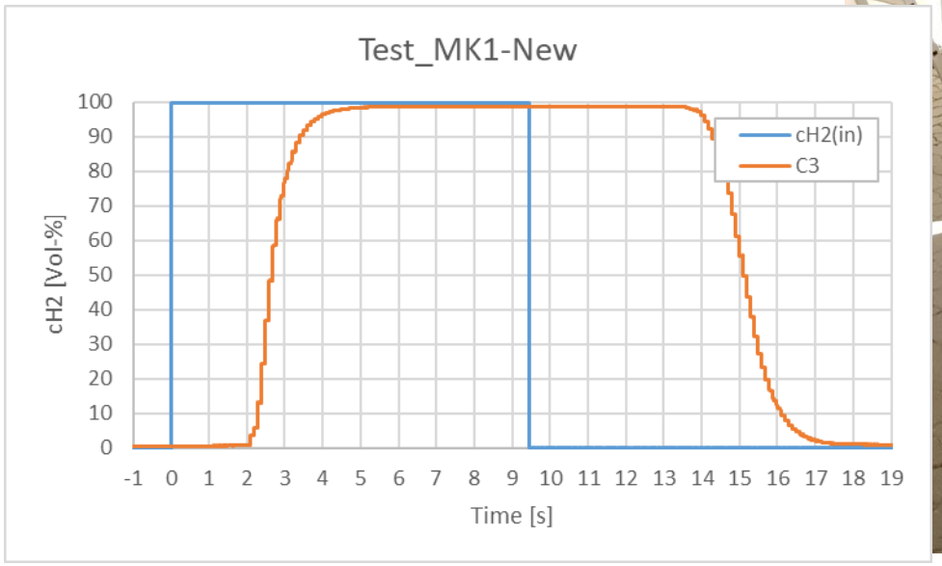

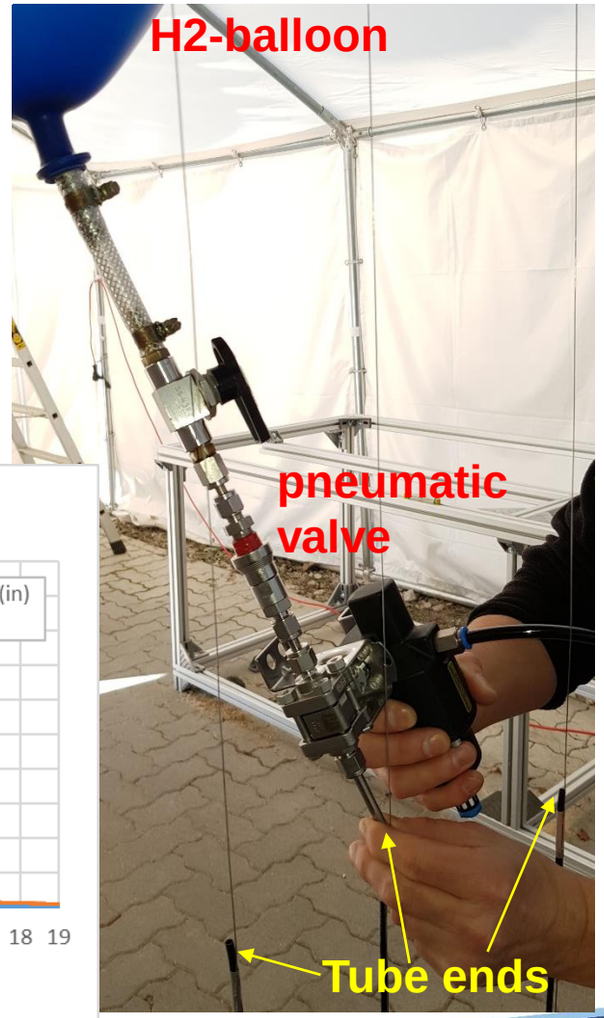

E3.1a Small Scale Multiphase Release

Instrumentation of the DisCha-facility

- **H2-concentration measurements**
  - Three sampling positions for H2-sensors positioned on jet axis and two horizontally besides it,

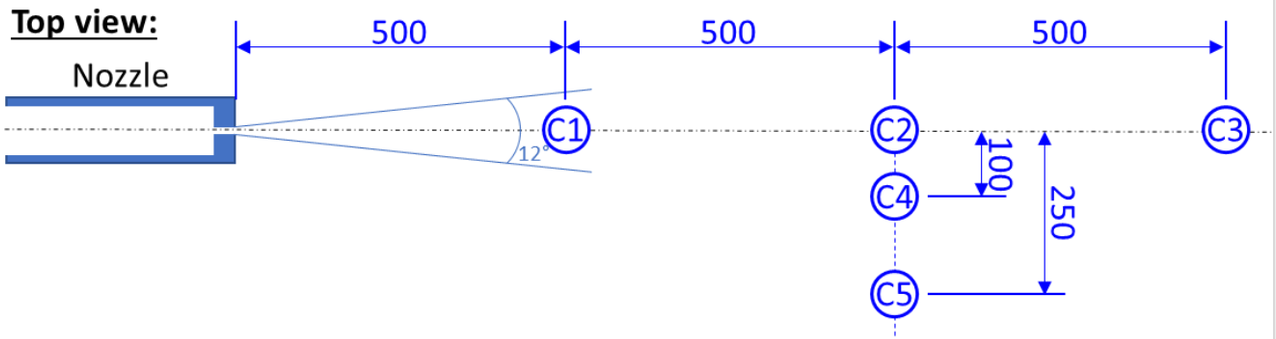

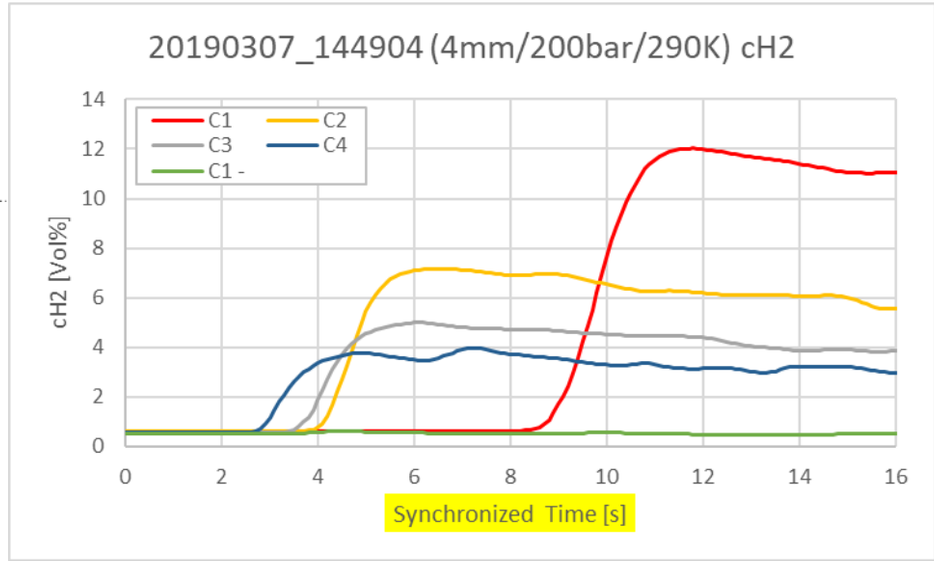

  - During measurement campaign no H2 was detected by C5,
  - Unrealistic arrival times of the H2-cloud at the measurement positions were observed since sensor C4 detects H2 much earlier than sensor C1, which measures much closer to the nozzle,
  - Possible reason: effects of flow above horizontal tube end.

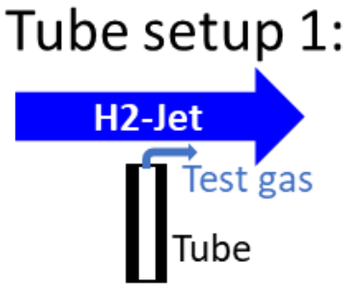

E3.1a Small Scale Multiphase Release

Instrumentation of the DisCha-facility

- **H2-concentration measurements**
  - Experiments with tilted cut at tube end yielded much more realistic results, so for sensors C1 to C4 a tilted cut was used,

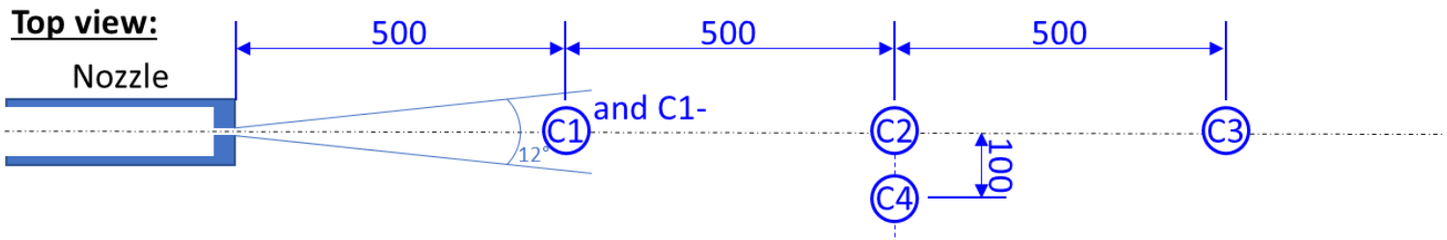

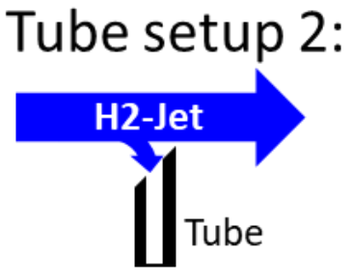

  - Position of C5 was changed to position next to C1, but C5 (now renamed to C1-) still having horizontal tube cut,
  - With new design more realistic measurements for slow releases,

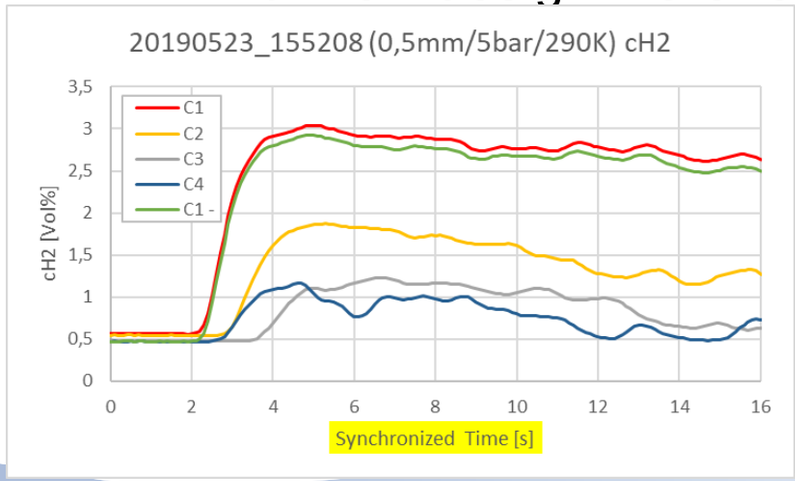

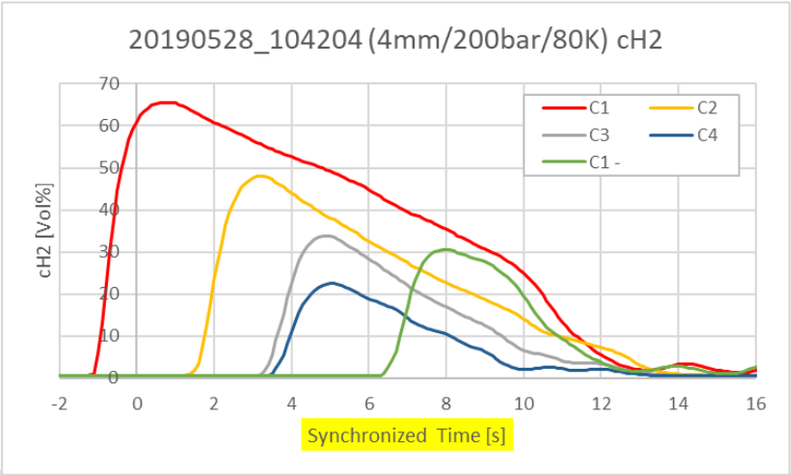

- But for fast releases opposite effect which causes H2 detection prior to nozzle opening!

E3.1a Small Scale Multiphase Release

Experiments in the DisCha-facility

- **Course of the experiments**
  - Facility was put into operation in February 2019, but due to the many different sensors and the resulting different data files problems were encountered to synchronize the data files.
  - During operation it was decided to
    - Increase time resolution of several sensors by changing interfaces,
    - change sampling mode of some sensors and to
    - add several sensors and a trigger signal if possible
  - With increasing time the facility became more and more elaborated and thus, by end of April 2019, it had reached its final set-up with which all experiments of the test matrix were performed once again.
  - Early and late data show good reproducibility, but quality of late data is better.
  - To keep data size within limits only a selection of data from the last series was published.

E3.1a Small Scale Multiphase Release

Experiments in the DisCha-facility

- **Test Matrix of "Warm" experiments at ambient temperature**

Pressure [bar]	Nozzle-Diameter [mm] 0.5	1	2	4
5	~~20190218_152803~~ ~~20190218_153211~~ 20190312_140742 **20190523_155208**	~~20190218_145937~~ ~~20190218_150203~~ 20190312_141636 **20190523_151618**	~~20190218_143922~~ ~~20190218_144147~~ 20190312_142444 **20190523_144219**	~~20190218_135240~~ ~~20190218_135848~~ ~~20190221_105323~~ 20190312_143216 **20190523_141327**
10	~~20190218_153516~~ ~~20190218_154048~~ 20190312_141024 20190523_154849	~~20190218_150528~~ ~~20190218_150851~~ 20190312_141909 20190523_151411	~~20190218_144358~~ ~~20190218_144713~~ 20190312_142706 **20190523_144022**	~~20190218_140223~~ ~~20190218_140530~~ ~~20190221_110229~~ 20190312_143846 **20190523_141008**
20	~~20190218_154318~~ ~~20190218_154510~~ **20190523_154414**	~~20190218_151140~~ ~~20190218_151621~~ **20190523_151013**	~~20190218_145002~~ ~~20190218_145411~~ **20190523_143801**	~~20190218_140858~~ ~~20190218_141305~~ **20190523_140705**
50	20190307_143703 20190326_152315 20190523_153958	20190307_141026 20190326_144506 20190326_144755 20190523_150640	20190307_111816 20190307_113513 20190326_140441 20190326_140752 **20190523_143501**	~~20190221_110511~~ ~~20190221_111257~~ 20190307_133159 20190523_140344 **20190624_145615**
100	20190307_144122 20190326_151458 20190326_151931 **20190523_153415**	20190307_141324 20190326_143750 20190326_144109 **20190523_150133**	20190307_113815 20190326_135707 20190326_140034 20190523_143020 **20190624_152500**	~~20190221_140324~~ ~~20190221_140517~~ ~~20190221_141846~~ 20190307_133454 20190322_104748 20190523_115747 **20190624_145052**
150	20190307_144458 20190326_150440 20190326_150854 20190523_152829	20190307_142436 20190326_142958 20190326_143412 20190523_145700	~~20190221_150608~~ ~~20190221_150950~~ 20190307_114105 20190326_135313 20190523_142651 **20190624_151944**	~~20190221_142431~~ ~~20190221_142819~~ 20190307_135327 20190322_103008 20190523_113338 **20190624_144205**
200	20190307_144904 20190326_145458 20190326_150007 **20190523_152309**	20190307_141656 20190326_141916 20190326_142523 **20190523_144939**	~~20190221_143934~~ ~~20190221_144801~~ ~~20190221_145609~~ ~~20190221_150110~~ 20190307_114908 20190326_134758 20190523_142245 **20190624_151045**	~~20190221_143129~~ ~~20190221_142424~~ 20190307_134340 20190307_140303 20190322_100645 20190523_113015 **20190624_143040**

- 7 initial (over-)pressures:
  p_{ini} = 5, 10, 20, 50, 100, 150, 200 bar,
- 4 circular aperture-sizes:
  d_{Noz} = 0.5, 1, 2, 4 mm,
- Several repetitions due to improvements of facility,
- In total 126 experiments,
- of which 22 were published.

Pressure [bar]	Nozzle-Diameter [mm] 0.5	1	2	4
5	**20190523_155208**	**20190523_151618**	**20190523_144219**	**20190523_141327**
10			**20190523_144022**	**20190523_141008**
20	**20190523_154414**	**20190523_151013**	**20190523_143801**	**20190523_140705**
50			**20190523_143501**	**20190523_140344**
100	**20190523_153415**	**20190523_150133**	**20190624_152500**	**20190624_145052**
150			**20190624_151944**	**20190624_144205**
200	**20190523_152309**	**20190523_144939**	**20190624_151045**	**20190624_143040**

E3.1a Small Scale Multiphase Release

Experiments in the DisCha-facility

- **Test Matrix of "Cold" experiments at LN2 boiling temperature**
  - 7 initial (over-)pressures: p_{ini} = 5, 10, 20, 50, 100, 150, 200 bar,
  - 4 circular aperture-sizes: d_{Noz} = 0.5, 1, 2, 4 mm,
  - Several repetitions due to improvements of facility,
  - In total 88 experiments, of which 22 were published.

Pressure [bar]	Nozzle-Diameter [mm] 0.5	1	2	4
5	20190509_143959 20190509_144955 20190604_151150 **20190604_153521**	20190507_155308 20190507_160047 **20190531_120333**	20190430_150817 20190430_151117 **20190531_103828**	20190503_112024 20190503_112408 **20190528_111918**
10	20190509_142254 20190509_143252 20190604_150515 20190604_152905	20190507_153753 20190507_154609 20190531_115603	20190430_144909 20190430_150600 **20190531_103408**	20190503_110955 20190503_111525 **20190528_111240**
20	20190509_111408 20190509_112201 20190604_145638 **20190604_152254**	20190507_152321 20190507_153041 **20190531_114903**	20190430_143105 20190430_144308 **20190531_102810**	20190503_110259 20190503_121635 **20190528_110441**
50	20190509_135757 20190509_141151 20190604_144425	20190507_150252 20190507_151256 20190531_113940	20190430_141445 20190430_142516 **20190531_101948**	20190503_115334 20190503_120719 **20190528_105437**
100	20190509_132731 20190509_134535 **20190604_142752**	20190507_143257 20190507_144631 **20190531_112944**	20190423_120305 20190430_111836 20190430_114028 **20190531_101249**	20190503_104121 20190503_105250 20190528_112837 **20190528_143608**
150	20190509_104138 20190509_105344 20190604_140657	20190507_135605 20190507_141457 20190531_111808	20190423_121441 20190430_135153 20190430_140732 **20190531_100257**	20190503_100144 20190503_102600 **20190528_142048**
200	20190509_100955 20190509_102557 **20190604_134543**	**20190531_110440**	20190430_102456 20190430_110643 **20190531_094951**	20190503_134536 20190503_140045 **20190528_104204**

Pressure [bar]	Nozzle-Diameter [mm] 0.5	1	2	4
5	**20190604_153521**	**20190531_120333**	**20190531_103828**	**20190528_111918**
10			**20190531_103408**	**20190528_111240**
20	**20190604_152254**	**20190531_114903**	**20190531_102810**	**20190528_110441**
50			**20190531_101948**	**20190528_105437**
100	**20190604_142752**	**20190531_112944**	**20190531_101249**	**20190528_143608**
150			**20190531_100257**	**20190528_142048**
200	**20190604_134543**	**20190531_110440**	**20190531_094951**	**20190528_104204**

E3.1a Small Scale Multiphase Release

Experiments in the DisCha-facility

- **Filenames and Structure of published Data**
  - Usually four data files were generated in one experiment,
  - All filenames consist of the date and time of the beginning of the record,
  - All files of an experiment were transformed into an Excel-sheet,
  - All Excel sheets of one experiment were grouped in one Excel-file with the name of the date and time of the beginning of the fast pressure record

Filename	Sheet	Content
20190531_110440.xlsx	20190531_110440-Press	Fast pressure record
	20190531_110440-cH2-Amb	Slow pressure record, H2-concentration, force, ambience, fieldmills
	20190531_110440-Weight	Scales
	20190531_110443-Temp	Temperatures

  - All Excel-files of cold or warm experiments with one nozzle are collected in one folder
  - Folder

    PRE3P1A_KIT_D2_300K_DATA

    contains all published data of experiments with 2 mm nozzle at ambient temperature.

Electrostatic Experiments (WP4.2)

A. Friedrich, A. Veser, G. Necker

July 23rd 2020

Pre-normative REsearch for Safe use of Liquid HYdrogen

E4.2 Electrostatic Measurements

- Experiments performed together with unignited DisCha-Experiments (WP3.1a) in same facility,
- Field-mills added to instrumentation end of April 2019,
- Field-mills used in **warm** and **cold** experimental series.

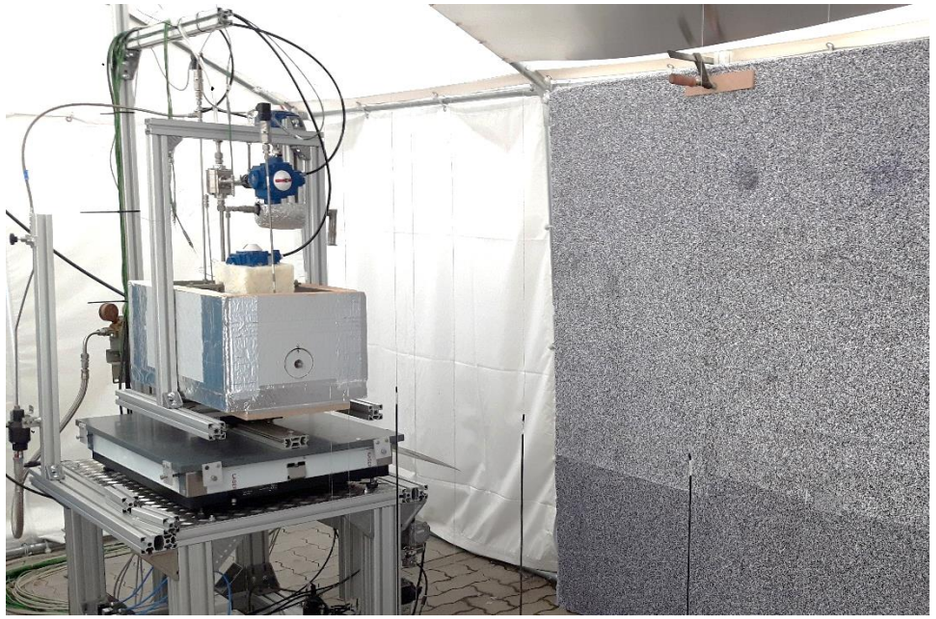

Tests at ambient temperature

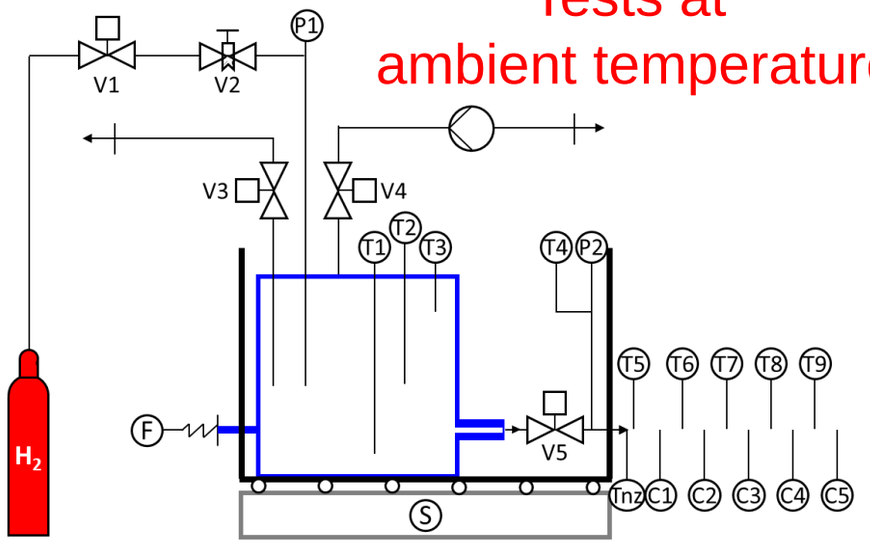

Tests at 80 K
(LN2 boiling temperature)

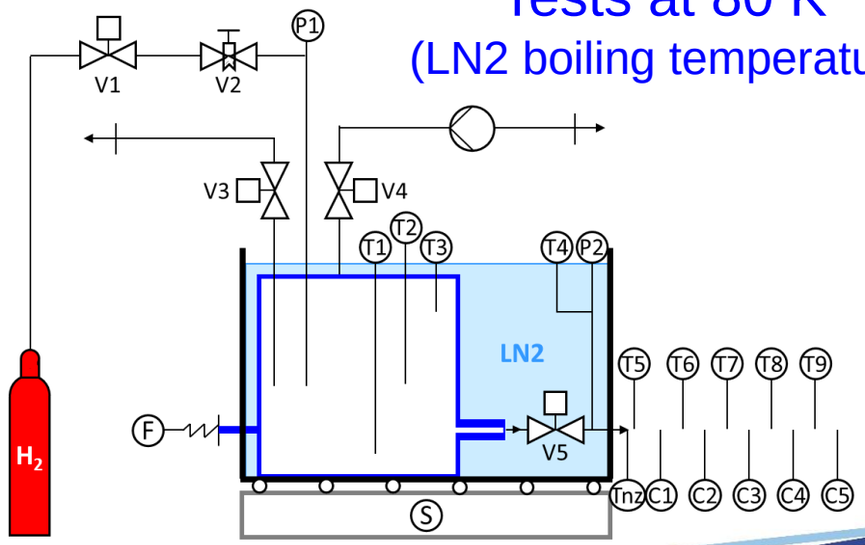

E4.2 Electrostatic Measurements

Additional Instrumentation of the DisCha-facility

- **Electrostatic measurements**
  - **FM1** and **FM2**
    Field mills positioned in horizontal distance of 0.9 m to jet axis.
    Manufacturer: Kleinwächter, Type: EFM 113B,
    Range: 5 kV/m, Accuracy: < 5% FS.

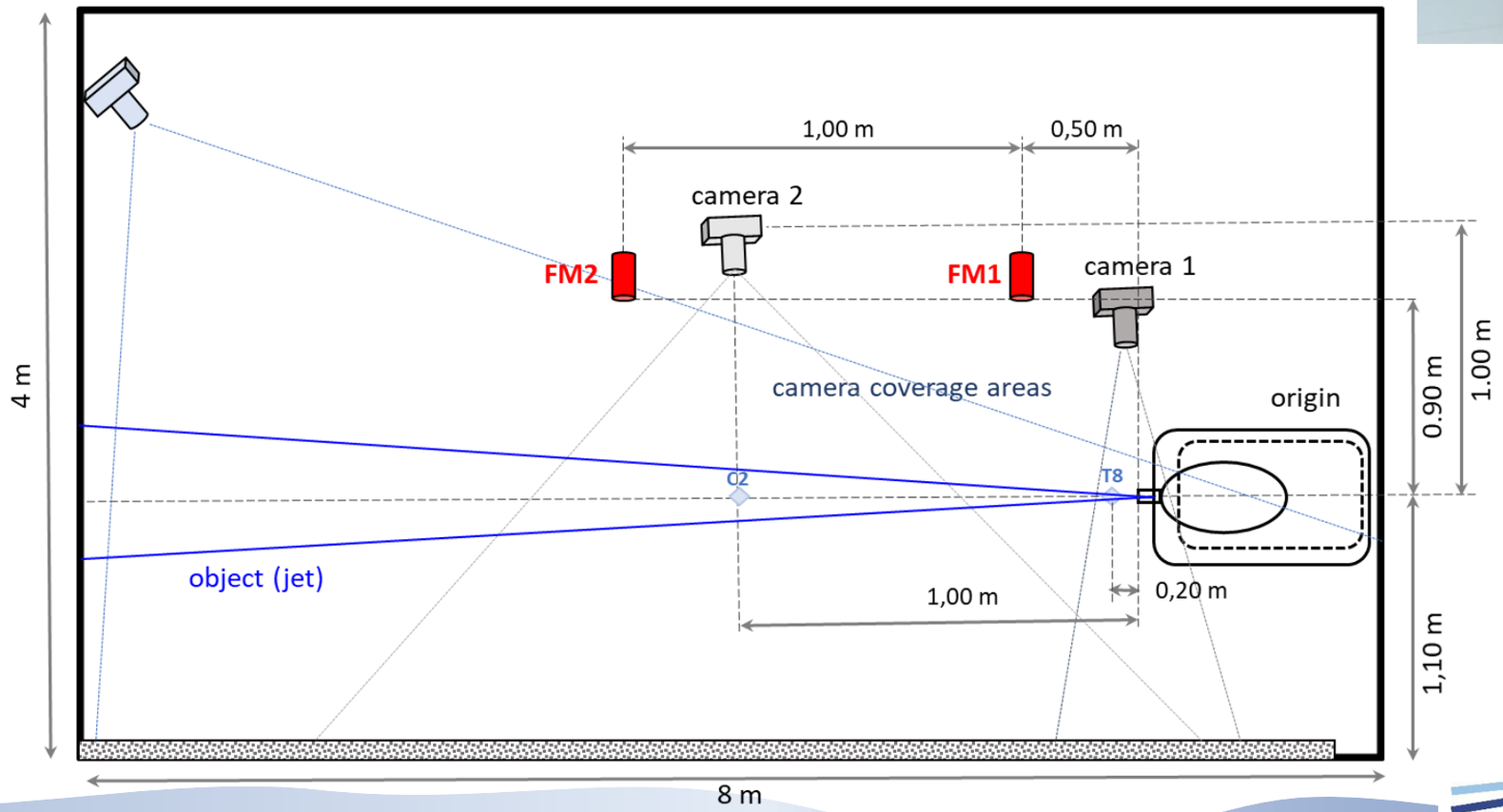

E4.2 Electrostatic Measurements

Electrostatic Measurements in the DisCha-facility

- **Test Matrix of "Cold" experiments at LN2-temperature**

Pressure [bar]	Nozzle-Diameter [mm] 0.5	1	2	4
5	20190509_143959 20190509_144955 20190604_151150 20190604_153521	20190507_155308 20190507_160047 20190531_120333	20190430_150817 20190430_151117 20190531_103828	20190503_112024 20190503_112408 20190528_111918
10	20190509_142254 20190509_143252 20190604_150515 20190604_152905	20190507_153753 20190507_154609 20190531_115603	20190430_144909 20190430_150600 20190531_103408	20190503_110955 20190503_111525 20190528_111240
20	20190509_111108 20190509_112201 20190604_145638 20190604_152254	20190507_152321 20190507_153041 20190531_114903	20190430_143105 20190430_144308 20190531_102810	20190503_110259 20190503_121635 20190528_110441
50	20190509_135757 20190509_141151 20190604_144425	20190507_150252 20190507_151256 20190531_113940	20190430_141445 20190430_142546 20190531_101948	20190503_115334 20190503_120719 20190528_105437
100	20190509_132731 20190509_134535 20190604_142752	20190507_143257 20190507_144631 20190531_112944	20190423_120305 20190430_111836 20190430_114028 20190531_101249	20190503_104121 20190503_105250 20190528_112837 20190528_143608
150	20190509_104138 20190509_105744 20190604_140657	20190507_135605 20190507_141457 20190531_111808	20190423_121441 20190430_135153 20190430_140732 20190531_100257	20190503_100144 20190503_102600 20190528_142048
200	20190509_100955 20190509_102557 20190604_134543	20190531_110440	20190430_102456 20190430_110643 20190531_094951	20190503_134536 20190503_140045 20190528_104204

- 7 initial (over-)pressures: p_{ini} = 5, 10, 20, 50, 100, 150, 200 bar,
- 4 circular aperture-sizes: d_{Noz} = 0.5, 1, 2, 4 mm,
- 2 or 3 repetitions for (almost) all cases,
- in total 88 experiments on the 28 cases,
- most cold experiments performed as one or two series for all pressures with one nozzle.

E4.2 Electrostatic Measurements

Electrostatic Measurements in the DisCha-facility

- **Test Matrix of "Warm" experiments at ambient temperature**

Pressure [bar]	Nozzle-Diameter [mm] 0.5	1	2	4
5	20190523_155208	20190523_151618	20190523_144219	20190523_141327
10	20190523_154849	20190523_151411	20190523_144022	20190523_141008
20	20190523_154414	20190523_151013	20190523_143801	20190523_140705
50	20190523_153958	20190523_150640	20190523_143501	20190523_140344 20190624_145615
100	20190523_153415	20190523_150133	20190523_143020 20190624_152500	20190523_115747 20190624_145052
150	20190523_152829	20190523_145700	20190523_142651 20190624_151944	20190523_113338 20190624_144205
200	20190523_152309	20190523_144939	20190523_142245 20190624_151045	20190523_113015 20190624_143040

- 7 initial (over-)pressures: p_{ini} = 5, 10, 20, 50, 100, 150, 200 bar,
- 4 circular aperture-sizes: d_{Noz} = 0.5, 1, 2, 4 mm,
- one repetition for selected experiments with large nozzle diameters and high pressures,

- in total 35 experiments on 28 cases,
- warm experiments on all cases performed as two series on two days (one series with complete matrix and one series with selected repetitions)

Due to limited number of experiments it is planned to publish all measurements

E4.2 Electrostatic Measurements

Electrostatic Measurements in the DisCha-facility

- **Structure of published data**
  - For all tests with electrostatic measurements only 4 channels were extracted from the huge amount of recorded sensors (Both pressures and both field-mills),
  - This data is stored in two Excel-files: One file for warm and one for cold tests.
  - In each Excel-file there is one sheet for one series with one nozzle at one day, e.g. for warm series (in case of a second series at one day “2” is added to the sheet name):

		Nozzle-Diameter [mm]			
		0.5	1	2	4
Pressure [bar]	5	20190523_155208	20190523_151618	20190523_144219	20190523_141327
	10	20190523_154849	20190523_151411	20190523_144022	20190523_141008
	20	20190523_154414	20190523_151013	20190523_143801	20190523_140705
	50	20190523_153958	20190523_150640	20190523_143501	20190523_140344 20190624_145615
	100	20190523_153415	20190523_150133	20190523_143020 20190624_152500	20190523_115747 20190624_145052
	150	20190523_152829	20190523_145700	20190523_142651 20190624_151944	20190523_113338 20190624_144205
	200	20190523_152309	20190523_144939	20190523_142245 20190624_151045	20190523_113015 20190624_143040
Sheet		20190523-290K-05mm	20190523-290K-1mm	20190523-290K-2mm 20190524-290K-2mm	20190523-290K-4mm 20190524-290K-4mm

E4.2 Electrostatic Measurements

Electrostatic Measurements in the DisCha-facility

- **Structure of published data**

	Nozzle [mm]	pini [bar]	Field max 1 (	Field max 2 (	Field min 1 (	Field min 2 (	RH [%]	Tamb [°C]	TNz [°C]
ame									
0190523-290K-05mr	Nozzle [mm]	pini [bar]	N05 FM1 ma	N05 FM2 ma	N05 FM1 mi	N05 FM2 mi	RH [%]	Tamb [°C]	TNz [°C]
0190523_155208	0,5	5	1,7	2,0	-1,7	-1,9	36,8	23,6	17,6
0190523_154849	0,5	10	1,5	2,0	-2,4	-3,1	36,3	23,5	17,2
0190523_154414	0,5	20	2,7	2,1	-1,3	-1,9	37,4	23,3	15,7
0190523_153958	0,5	50	2,6	1,3	-0,9	-2,6	36,9	23,2	15,2
0190523_153415	0,5	100	4,4	2,1	-0,2	-2,9	36,6	23,1	14,3
0190523_152829	0,5	150	5,4	2,5	0,6	-2,5	36,0	23,2	14,2
0190523_152309	0,5	200	8,6	1,7	-0,3	-2,7	37,5	23,3	23,4
0190523-290K-1mm	Nozzle [mm]	pini [bar]	N1 FM1 max	N1 FM2 max	N1 FM1 min	N1 FM2 min	RH [%]	Tamb [°C]	TNz [°C]
0190523_151618	1	5	2,0	2,6	-1,6	-2,2	38,9	23,1	11,8
0190523_151411	1	10	2,5	2,5	-1,6	-1,8	38,3	23,1	12,2
0190523_151013	1	20	2,7	2,9	-1,6	-3,1	38,8	22,8	9,9
0190523_150640	1	50	2,9	3,3	-0,8	-3,1	39,3	22,8	10,5
0190523_150133	1	100	4,2	2,5	-0,7	-3,5	39,0	22,8	9,4
0190523_145700	1	150	5,3	2,9	-0,6	-2,9	39,7	22,7	11,9
0190523_144939	1	200	7,3	3,7	-0,6	-2,3	40,5	22,6	22,7
0190523-290K-2mm	Nozzle [mm]	pini [bar]	N2 FM1 max	N2 FM2 max	N2 FM1 min	N2 FM2 min	RH [%]	Tamb [°C]	TNz [°C]
0190523_144219	2	5	1,3	2,3	-1,8	-3,0	39,5	22,2	6,9
0190523_144022	2	10	1,3	1,9	-1,6	-3,4	39,9	22,1	4,8
0190523_143801	2	20	1,8	3,5	-1,5	-2,9	38,8	22,1	0,0
0190523_143501	2	50	2,2	2,8	-1,2	-2,4	39,7	22,3	5,8
0190523_143020	2	100	2,5	1,9	-1,9	-3,7	39,5	22,1	0,4
0190523_142651	2	150	4,6	2,4	-1,3	-3,7	38,3	22,0	4,8
0190523_142245	2	200	6,2	2,4	-1,6	-2,3	42,1	21,9	24,0
0190524-290K-2mm 2			N2-2 FM1 mi	N2-2 FM2 mi	N2-2 FM1 mi	N2-2 FM2 min			
0190624_152500	2	100	-0,8	0,3	-81,1	-28,3	40,6	33,2	17,2
0190624_151944	2	150	0,0	1,0	-17,7	-20,1	40,8	33,0	21,6
0190624_151045	2	200	4,8	1,6	-27,0	-29,4	41,7	32,9	32,5
0190523-290K-4mm	Nozzle [mm]	pini [bar]	N4 FM1 max	N4 FM2 max	N4 FM1 min	N4 FM2 min	N4 RH%	N4 Tamb	N4 TNz
0190523_141327	4	5	1,6	3,2	-2,5	-1,6	42,3	21,6	9,7
0190523_141008	4	10	1,4	3,3	-1,4	-3,0	41,8	21,4	7,7
0190523_140705	4	20	1,2	3,2	-1,8	-4,3	39,4	21,8	4,8
0190523_140344	4	50	1,4	2,5	-2,2	-2,9	41,3	21,8	9,4
0190523_135747	4	100	2,4	3,1	-1,5	-2,6	41,1	21,3	19,5
0190523_113338	4	150	2,5	2,4	-1,7	-3,9	62,6	17,1	-8,5
0190523_113015	4	200	3,2	1,7	-2,1	-3,8	63,6	17,0	9,5
0190524-290K-4mm 2			N4-2 FM1 mi	N4-2 FM2 mi	N4-2 FM1 mi	N4-2 FM2 min			
0190624_145615	4	50	1,9	1,5	-211,1	-56,7	42,0	33,0	18,4
0190624_145052	4	100	9,8	-1,5	-233,7	-73,1	42,0	32,8	20,8
0190624_144245	4	150	12,0	5,9	-208,9	-49,0	42,4	32,8	23,6
0190624_143040	4	200	47,2	3,0	-29,4	-42,0	42,8	32,5	29,8

SummaryFM-290K | 20190523-290K-05mm | 20190523-290K-1mm | 20190523-290K-2mm | 20190624-290K-2mm | 20190523-290K-4mm | 20190624-290K

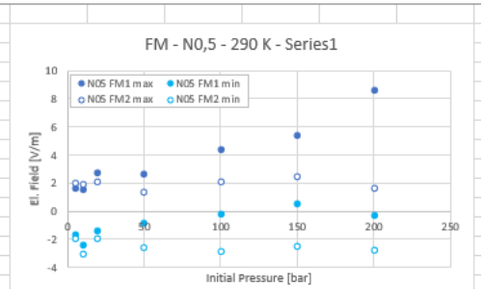

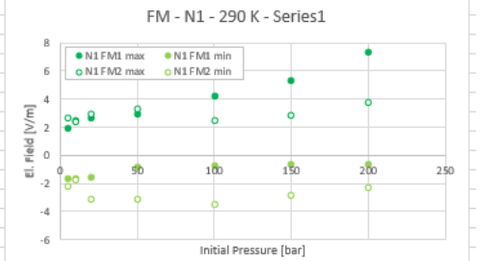

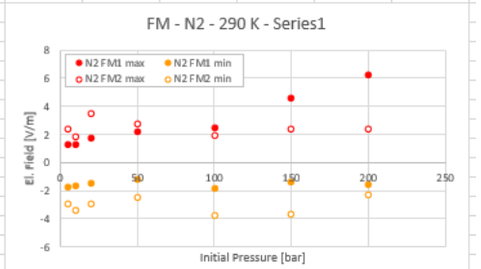

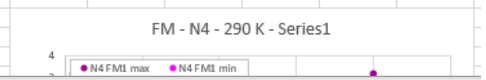

- Both Excel-files (warm and cold experiments) have a summary, where all series and experiments are listed with their initial conditions and max/min field values,
- Summarizing plots show the results of every series, and, if available, a plot with the results of all series performed with the same nozzle.

E4.2 Electrostatic Measurements

Electrostatic Measurements in the DisCha-facility

- **Structure of published data**

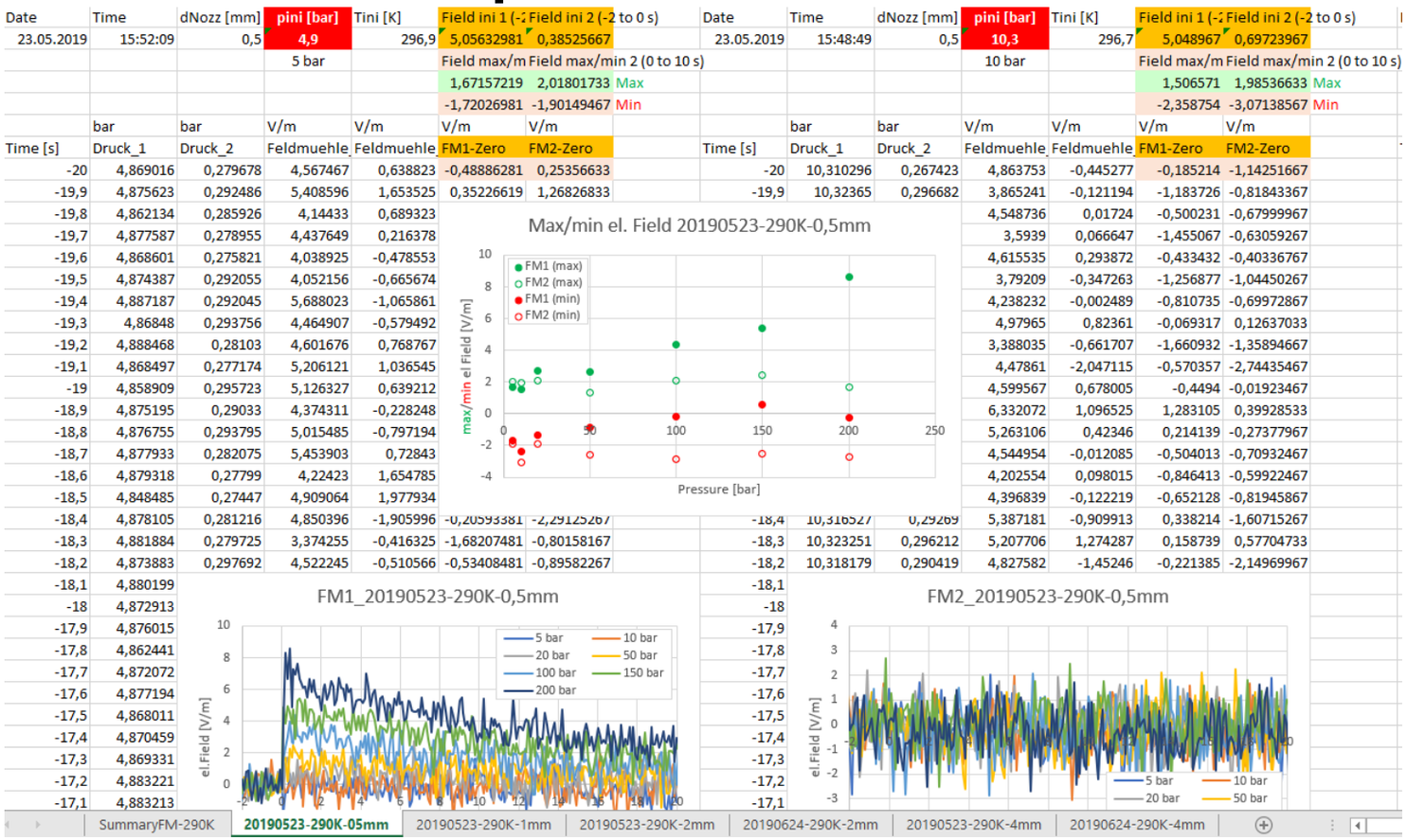

Date	Time	dNozz [mm]	pini [bar]	Tini [K]	Field ini 1 (-2	Field ini 2 (-2 to 0 s)
23.05.2019	15:52:09	0,5	4,9	296,9	5,05632981	0,38525667
			5 bar		Field max/m	Field max/min 2 (0 to 10 s)
					1,67157219	2,01801733 Max
					-1,72026981	-1,90149467 Min
	bar	bar	V/m	V/m	V/m	V/m
Time [s]	Druck_1	Druck_2	Feldmuehle_	Feldmuehle	FM1-Zero	FM2-Zero
-20	4,869016	0,279678	4,567467	0,638823	-0,48886281	0,25356633
-19,9	4,875623	0,292486	5,408596	1,653525	0,35226619	1,26826833
-19,8	4,862134	0,285926	4,14433	0,689323		
-19,7	4,877587	0,278955	4,437649	0,216378		
-19,6	4,868601	0,275821	4,038925	-0,478553		
-19,5	4,874387	0,292055	4,052156	-0,665674		
-19,4	4,887187	0,292045	5,688023	-1,065861		
-19,3	4,86848	0,293756	4,464907	-0,579492		
-19,2	4,888468	0,28103	4,601676	0,768767		
-19,1	4,868497	0,277174	5,206121	1,036545		
-19	4,858909	0,295723	5,126327	0,639212		
-18,9	4,875195	0,29033	4,374311	-0,228248		
-18,8	4,876755	0,293795	5,015485	-0,797194		
-18,7	4,877933	0,282075	5,453903	0,72843		
-18,6	4,879318	0,27799	4,22423	1,654785		
-18,5	4,848485	0,27447	4,909064	1,977934		
-18,4	4,878105	0,281216	4,850396	-1,905996	-0,20593381	-2,29125267
-18,3	4,881884	0,279725	3,374255	-0,416325	-1,68207481	-0,80158167
-18,2	4,873883	0,297692	4,522245	-0,510566	-0,53408481	-0,89582267
-18,1	4,880199					
-18	4,872913					
-17,9	4,876015					
-17,8	4,862441					
-17,7	4,872072					
-17,6	4,877194					
-17,5	4,868011					
-17,4	4,870459					
-17,3	4,869331					
-17,2	4,883221					
-17,1	4,883213					

Date	Time	dNozz [mm]	pini [bar]	Tini [K]	Field ini 1 (-2	Field ini 2 (-2 to 0 s)
23.05.2019	15:48:49	0,5	10,3	296,7	5,048967	0,69723967
			10 bar		Field max/m	Field max/min 2 (0 to 10 s)
					1,506571	1,98536633 Max
					-2,358754	-3,07138567 Min
	bar	bar	V/m	V/m	V/m	V/m
Time [s]	Druck_1	Druck_2	Feldmuehle_	Feldmuehle	FM1-Zero	FM2-Zero
-20	10,310296	0,267423	4,863753	-0,445277	-0,185214	-1,14251667
-19,9	10,32365	0,296682	3,865241	-0,121194	-1,183726	-0,81843367
			4,548736	0,01724	-0,500231	-0,67999967
			3,5939	0,066647	-1,455067	-0,63059267
			4,615535	0,293872	-0,433432	-0,40336767
			3,79209	-0,347263	-1,256877	-1,04450267
			4,238232	-0,002489	-0,810735	-0,69972867
			4,97965	0,82361	-0,069317	0,12637033
			3,388035	-0,661707	-1,660932	-1,35894667
			4,47861	-2,047115	-0,570357	-2,74435467
			4,599567	0,678005	-0,4494	-0,01923467
			6,332072	1,096525	1,283105	0,39928533
			5,263106	0,42346	0,214139	-0,27377967
			4,544954	-0,012085	-0,504013	-0,70932467
			4,202554	0,098015	-0,846413	-0,59922467
			4,396839	-0,122219	-0,652128	-0,81945867
-18,4	10,316527	0,29269	5,387181	-0,909913	0,338214	-1,60715267
-18,3	10,323251	0,296212	5,207706	1,274287	0,158739	0,57704733
-18,2	10,318179	0,290419	4,827582	-1,45246	-0,221385	-2,14969967
-18,1						
-18						
-17,9						
-17,8						
-17,7						
-17,6						
-17,5						
-17,4						
-17,3						
-17,2						
-17,1						

- All tests of one series are arranged next to each other on the same sheet,
- For every test date and time as well as the initial conditions are given in a header,
- For all tests only 4 channels with synchronized time are given (Pves, Pnoz, FM1 and FM2),
- Further 2 columns show zero-corrected FM signals (averaged zero for time -2 to 0 s before nozzle opening),
- Between header and data the max/min values of FM1 and FM2 are listed (for time 0 to 10 s after nozzle opening),

- Min/Max values are summarized at the right end of the sheet and in summary sheet.

E4.2 Electrostatic Measurements

Electrostatic Measurements in the DisCha-facility

- **Preliminary Results of the Tests**
  - No ignition phenomenon was observed in complete experimental program,
  - Considerable fields were measured in most of the experiments,
  - Positive as well as negative polarities were observed,
  - Higher fields usually measured for cold tests than for warm tests,
  - Higher fields usually measured closer to the nozzle (FM1) than farther away from it (FM2),
  - Higher fields usually measured for higher initial pressures.

E4.2 Electrostatic Measurements

Electrostatic Measurements in the DisCha-facility

- **Preliminary Results of the Tests**
  - Experiments performed within one series show same behavior and trend:

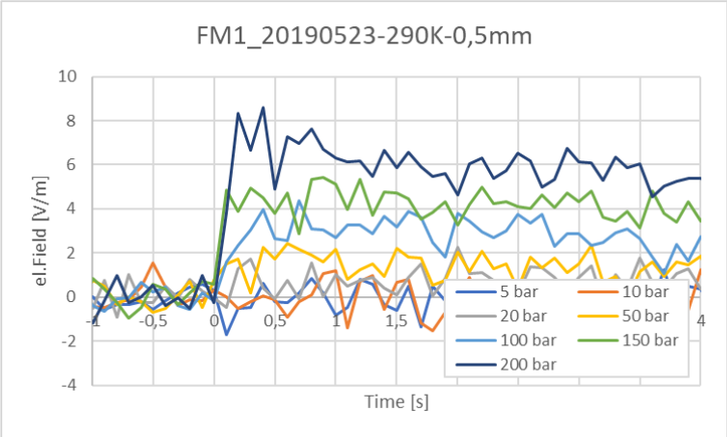

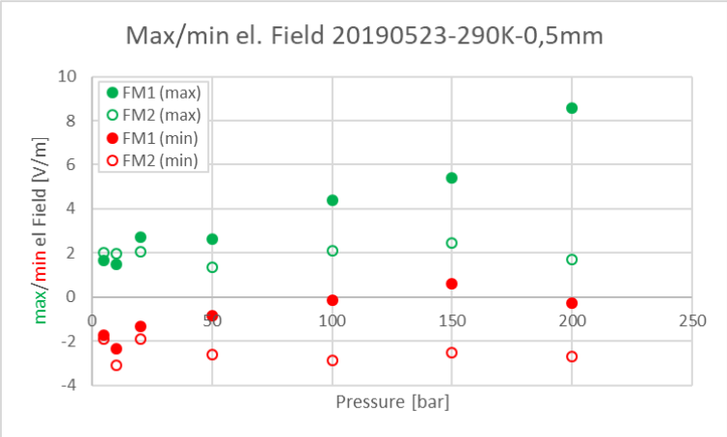

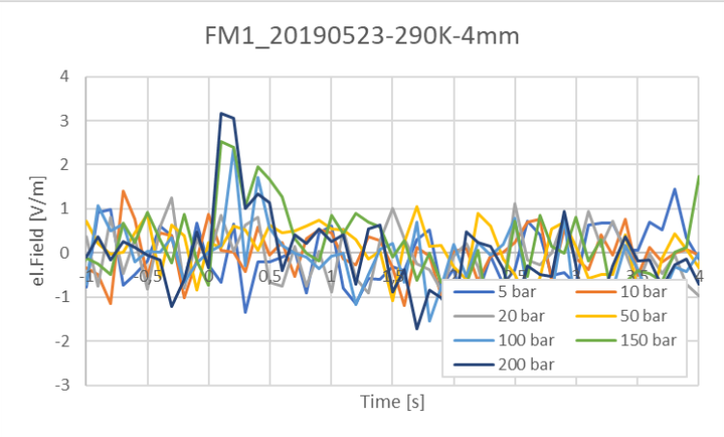

  - fields show same polarity
  - FM1 (nearer to nozzle) shows larger field than FM2,
  - higher initial pressure generates higher field.
- Experimental series performed on one day also show same behavior and trend:
  - larger nozzle generates lower fields

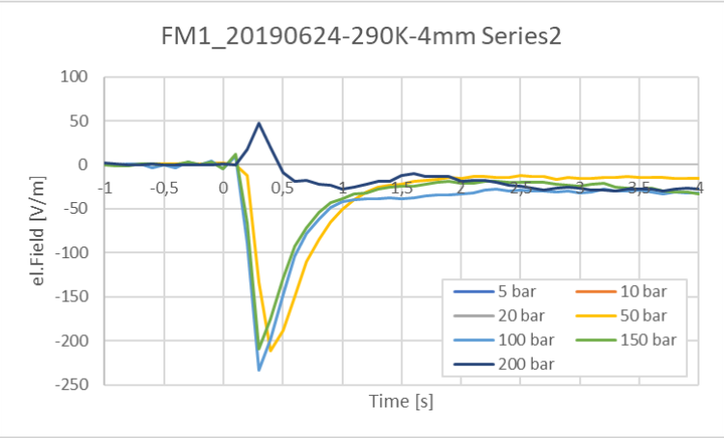

But different findings for same settings on different days!

E4.2 Electrostatic Measurements

Electrostatic Measurements in the Cryostat-facility (E3.1b)

- **Additional Instrumentation of the Cryostat-facility**
  - For the electrostatic measurements in the Cryostat-facility three field-mills were used:
  - **FM1** and **FM2** (already used in DisCha-experiments) and an additional **FM3** of same type
    Manufacturer: Kleinwächter, Type: EFM 113B,
    Range: 5 kV/m, Accuracy: < 5% FS.
  - Data not yet evaluated, but due to lower initial pressures (< 5 bar) only low fields expected.

But interesting phenomena observed during Cryostat-experiments might also affect field built-up…

Cryostat-Experiments (WP3.1b)

A. Friedrich, A. Veser, G. Necker, J. Gerstner, N. Kotchourko

July 23rd 2020

Pre-normative REsearch for Safe use of Liquid HYdrogen

E3.1b Small Scale Multiphase Release
(Cryostat-Facility)

- Since no releases of LH_2 were possible from DisCha-facility a Cryostat-facility was planned, fabricated and used to realize LH_2-releases.
- Pre-calculation on the expected massflow for the maximum release conditions P_{ini} = 5 bar, d_{Noz} = 4 mm ➔ m = 96.4 g/s,
- Massflow is too large to be measured via evaporation and measurement at ambient temperature
  ➔ scales method was chosen for flow measurement,
- In case of an ignition the released amount of H2 is too large to be handled in HyKA (several buildings with windows are located in the vicinity)
  ➔ Experiments had to be performed on free field test site,
- Cryostat-tests were last test series performed on the site with the LH2-Trailer from Air-Liquide (during COVID-19 lockdown in Germany).

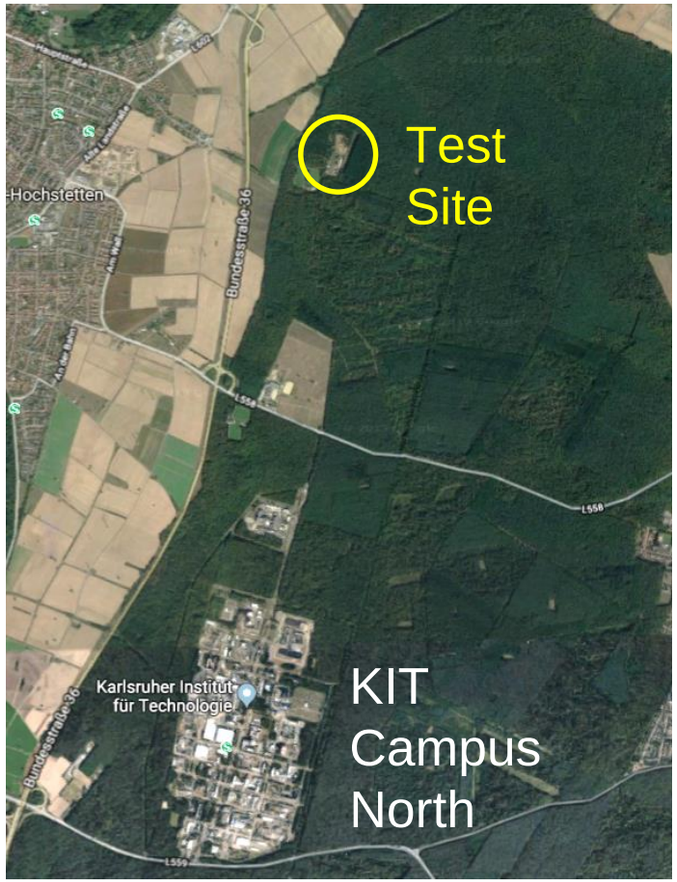

E3.1b Small Scale Multiphase Release
(Cryostat-Facility)

Description of the Cryostat-facility

- **Properties**

- P_{max}: 6 bar ➔ **P_{max}(Exp): 5 bar**
- Volume: 225 dm³,
- Long, uncooled neck reduces available volume,
- Loaned from other Institute
  ➔ Revision was necessary:
  - Top flange with pipework, controls and instruments was missing and therefore had to be designed and fabricated,
  - old safety valves had to be replaced,
  - security check (TÜV) was compulsory.

E3.1b Small Scale Multiphase Release
(Cryostat-Facility)

Description of the Cryostat-facility

- **Properties**
- Main problem was missing lid of the Cryostat which had to be constructed and fabricated at KIT-workshop,
- For long time connection to the LH2-trailer was unclear, so the construction took much longer than initially expected,
- Therefore large part of fabrication work (e.g. holes for bolts to connect lid with vessel) was done already earlier at KIT-workshop,
- When construction was completed finalization of lid was no longer possible at KIT-workshop (COVID-19 lockdown),
- So lid was completed externally and arrived just in time for the experiments.

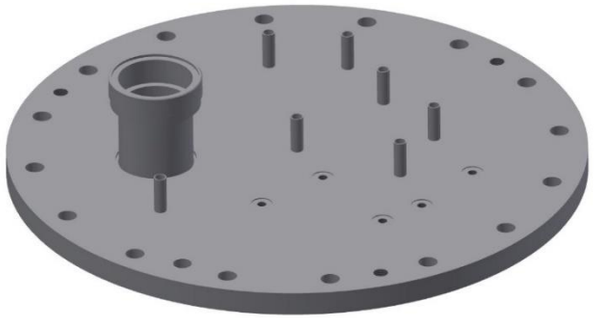

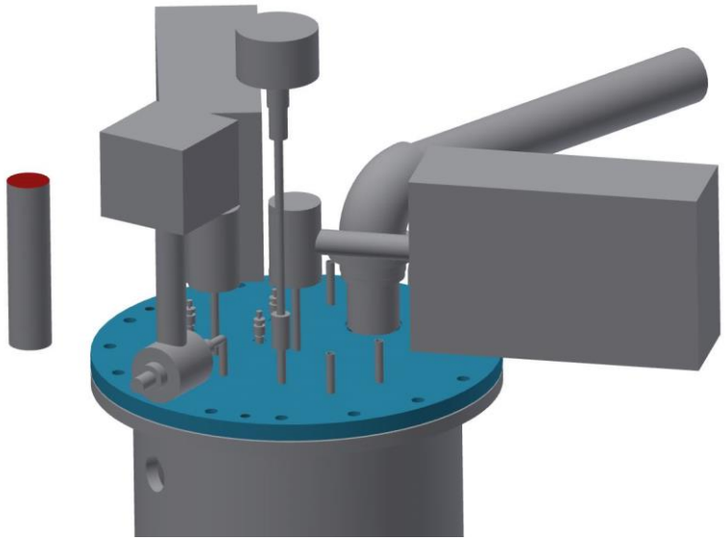

E3.1b Small Scale Multiphase Release
(Cryostat-Facility)

Instrumentation of the Cryostat-facility

- **Vessel (similar to DisCha)**
  - **Cryo1 - Cryo5** Thermocouples in different heights for fluid level measurement,
  - **Pves** Initial pressure inside the vessel (same as DisCha),
  - **Scales** for weight measurement of complete assembly
    Manufacturer: Mettler-Toledo,
    Type: PFK989 Range: 0 - 600 kg,
    Accuracy: 1 g (10 g under rugged free field conditions).

To enable weight measurements the complete Cryostat-facility was placed on the scales. Many efforts were made to eliminate influences of wires and hoses.

Weight measurements had to be recorded separately due to output format.
Maximum measurement frequency of scales is 2 Hz.

Scales records as separate columns in sheet *Date_time*-VDec10.

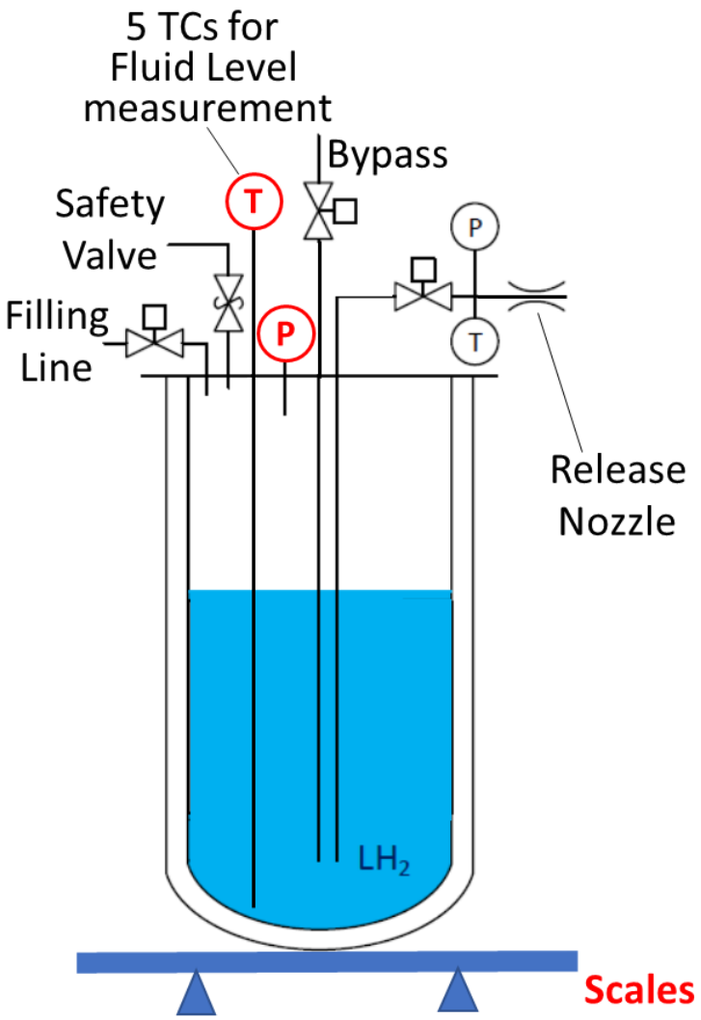

E3.1b Small Scale Multiphase Release
(Cryostat-Facility)

Instrumentation of the Cryostat-facility

- **Release branch (same as DisCha)**
  - **P2 (= P_{noz})** Pressure inside release line:
    Manufacturer: WIKA, Type: S-20,
    Range: 0 - 200 bar, Accuracy: < 0.125 % FS.

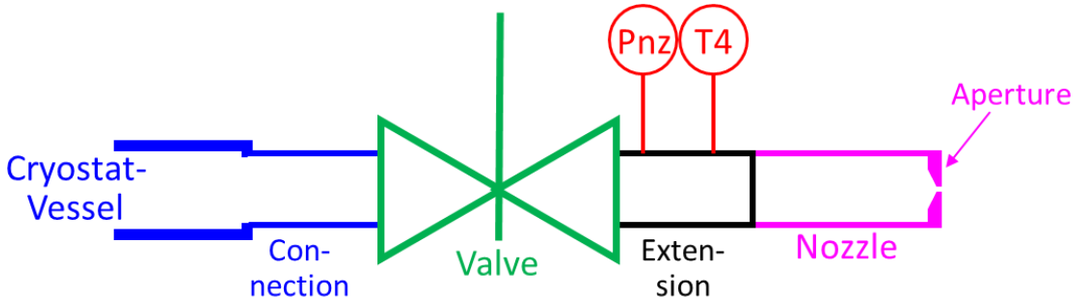

  - **T4** Temperature of gas in release line, welded into T-junction of tube for P2 and release line with **direct contact to effusing gas!**
    Manufacturer: KIT-Workshop,
    Type: Type K, d = 1.0 mm Accuracy: 1.66 K.

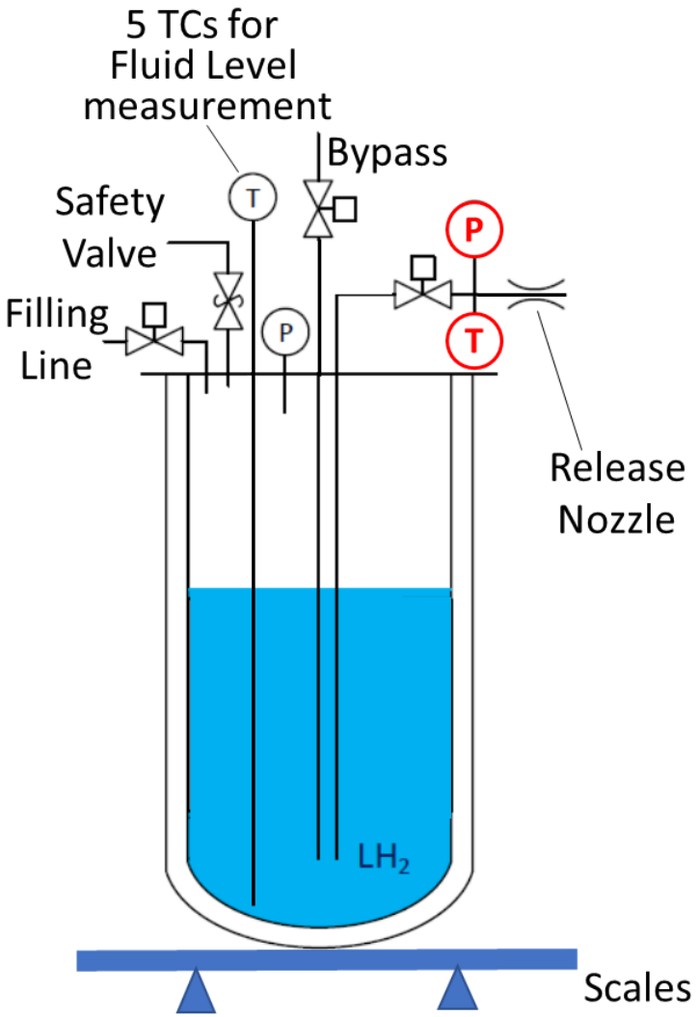

E3.1b Small Scale Multiphase Release
(Cryostat-Facility)

Instrumentation of the Cryostat-facility

- **Ex-Vessel-Instrumentation (similar to DisCha)**

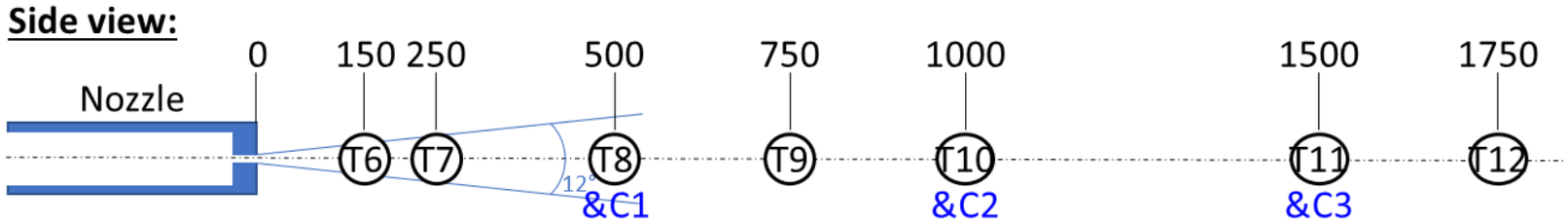

- Same sensors, same procedure and same problems with H2-concentration measurements as in DisCha-experiments,
- Due to larger safety distance and necessity to warn gas prior to analysis longer tubes were necessary, so time delay is 30 s in these tests.
- Due to lower release pressures (< 6 bar) pressing effect in tilted tube cuts is less pronounced.

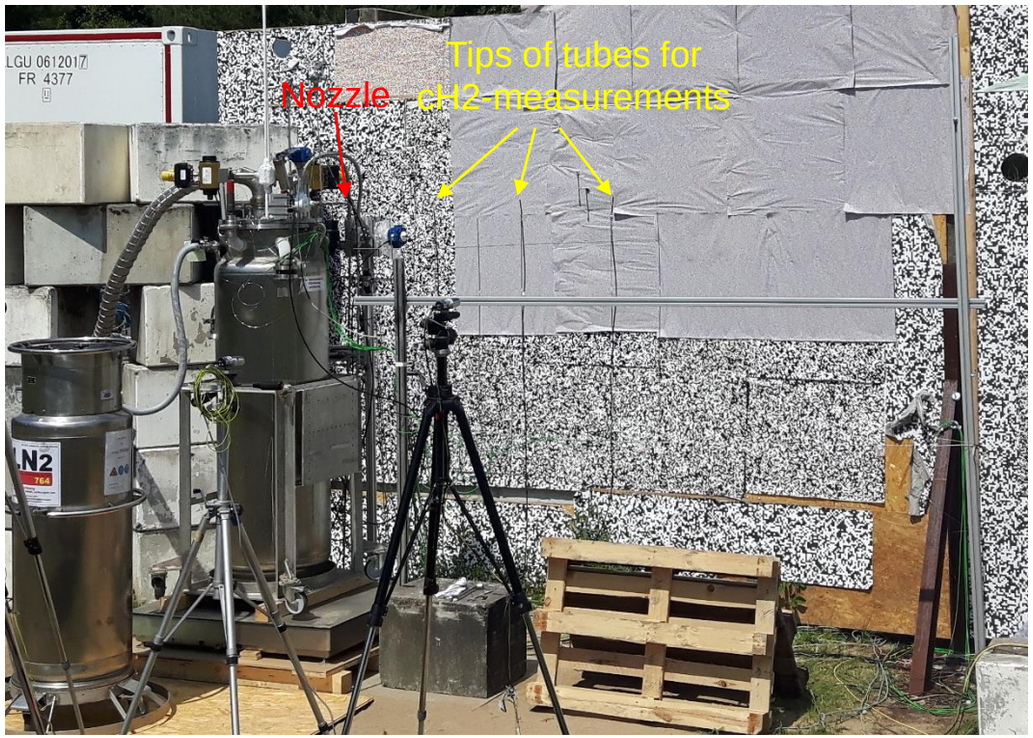

E3.1b Small Scale Multiphase Release
(Cryostat-Facility)

Instrumentation of the Cryostat-facility

- **Optical Instrumentation**
  - Same cameras as in DisCha-experiments:
    - Canon 1 **(C1)**
    - Canon 2 **(C2)**
    - Panasonic Video 1 **(P1)**
  - Additional cameras:
    - Panasonic Video 2 **(P2)** (different locations P2a and P2b)
    - Thermocamera **(IR)**
  - and 3 field-mills **(FM1 - FM3)** (same type as in DisCha)

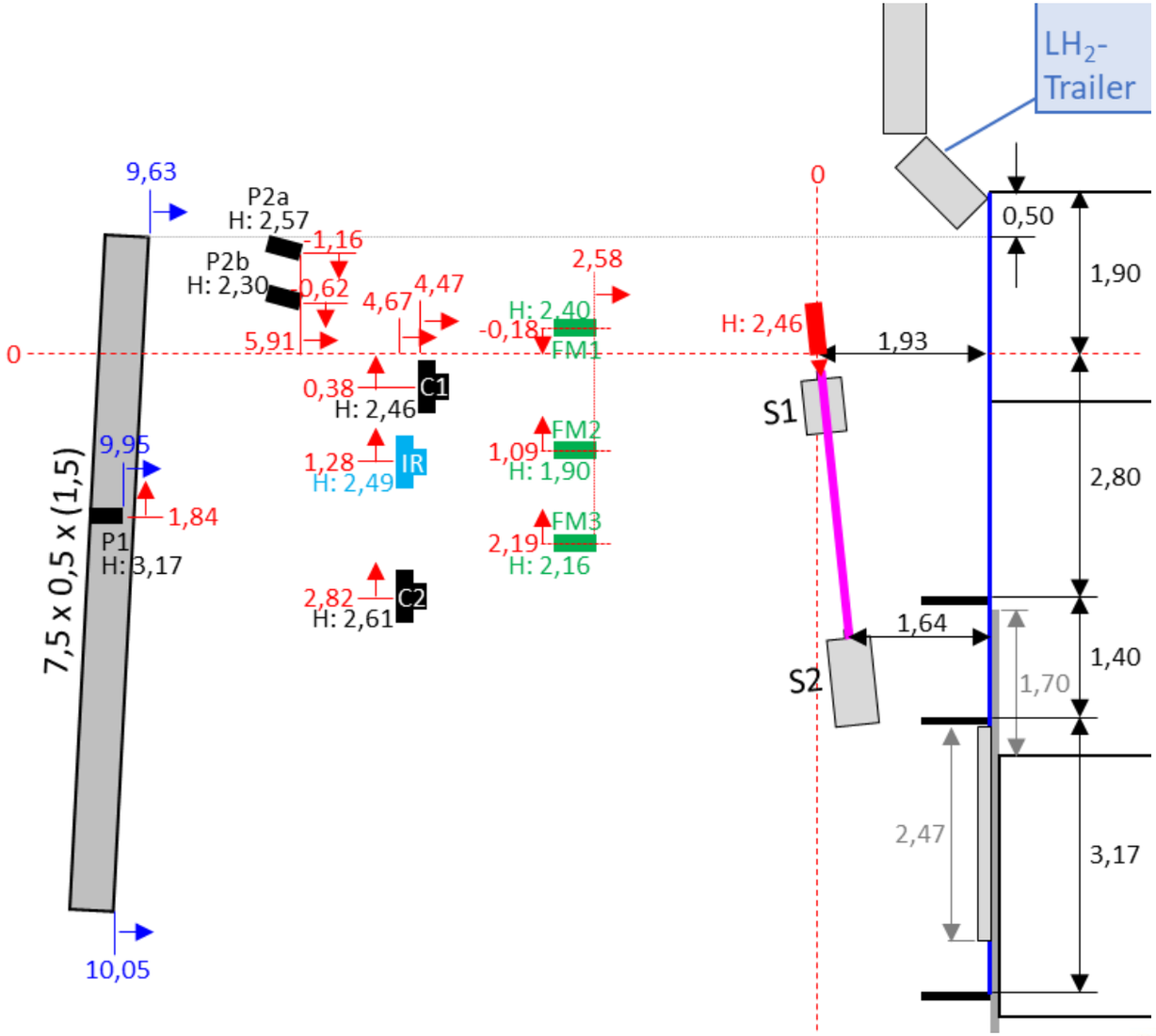

E3.1b Small Scale Multiphase Release
(Cryostat-Facility)

Experiments with the Cryostat-facility

- **Test Matrix**
- 5 **"Warm"** tests with GH2 at ambient temperature for comparison with DisCha :
  - 2 Nozzle diameters: 2, 4 mm
  - 2 initial pressures: 3, 5 bar (with one repetition)
- 6 **"Cold"** tests with LH2 at approx. 30K:
  - 4 Tests with 4 mm Nozzle and initial pressures of 2, 3, 4, 4.5 bar
  - 2 Tests with 2 mm nozzle and an initial pressure of 4 bar (one repetition)

- Liquid releases achieved in all cold tests
- Cryostat-experiments were last series with LH2
  ➔ not yet fully evaluated
- First results mainly from optical observations.

E3.1b Small Scale Multiphase Release
(Cryostat-Facility)

Experiments with the Cryostat-facility

- **Optical observations**
  - Experiment C7
    (20200521-133851: d_{Nz} = 2 mm, p_{ini} = 4bar)

E3.1b Small Scale Multiphase Release
(Cryostat-Facility)

Experiments with the Cryostat-facility

- **Optical observations**
  - Formation of “finger-like” structure at tip of nozzle,
  - With increasing release duration “finger” grows longer, in some cases jet was even split by “finger(s)”
  - From time to time finger was blown away by the jet or just fell down,

  - After tests no traces on locations where “fingers” had landed,
  - Possibly coincidence of detachment of “finger” with field measurements.

Ignited DisCha-Experiments (WP5.1)

A. Friedrich, A. Veser, G. Necker, J. Gerstner,

N. Kotchourko

July 23rd 2020

Pre-normative REsearch for Safe use of Liquid HYdrogen

E5.1 Ignited jets (DisCha-Facility)

Description of the DisCha-facility for ignited jets

- Due to safety considerations it was decided not to perform the ignited DisCha-experiments at HyKA in KIT, so these experiments were also conducted on the free-field test site,

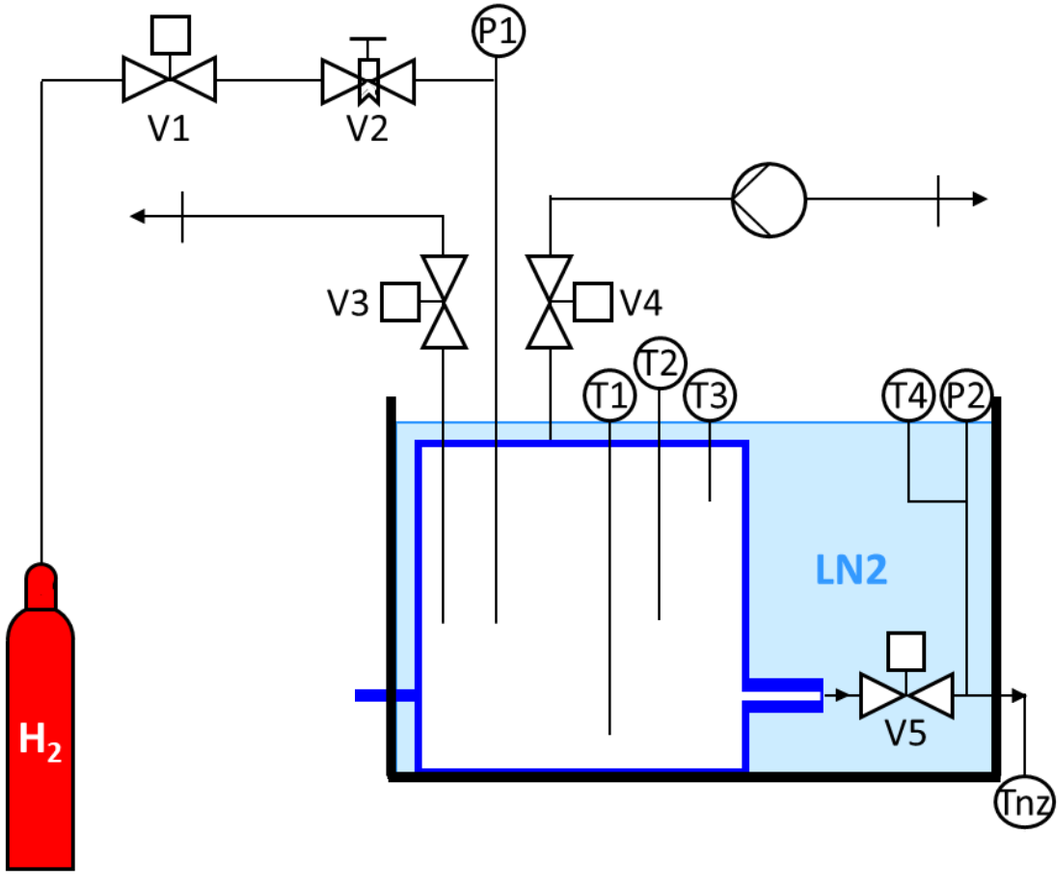

- In principle the same facility as in the unignited experiments was used,

but ...

- **NO** thermocouples in jet,
- **NO** H2-concentration, measurements in the jet,
- **NO** force sensor,
- **NO** scales.

E5.1 Ignited jets (DisCha-Facility)

Specific instrumentation of the DisCha-facility for ignited jets

- **Ignition electrodes**
  - Diameter: d = 3.5 mm
  - pointed tips,
  - Gap ≈ 4 mm
  - Output: 20 kV / 60 kHz
- **Fast dynamic pressure sensors**
  - PCB types: 112A22, 113B21 and 113B28,
  - Sensitivities: 3.5 bar, 14 bar and 3.5 bar
  - Recorded separately with fast data acquisition system
- **Anemometer (ambient wind conditions)**
  - Type: YOUNG model 81000,
  - Wind in 3 directions (N→S, E→W, ↑ Up) and T.
- **Sound level meter**
  - Type: roline RO1350
  - Distance: d = 6450 mm
  - Also recorded with fast data acquisition system.

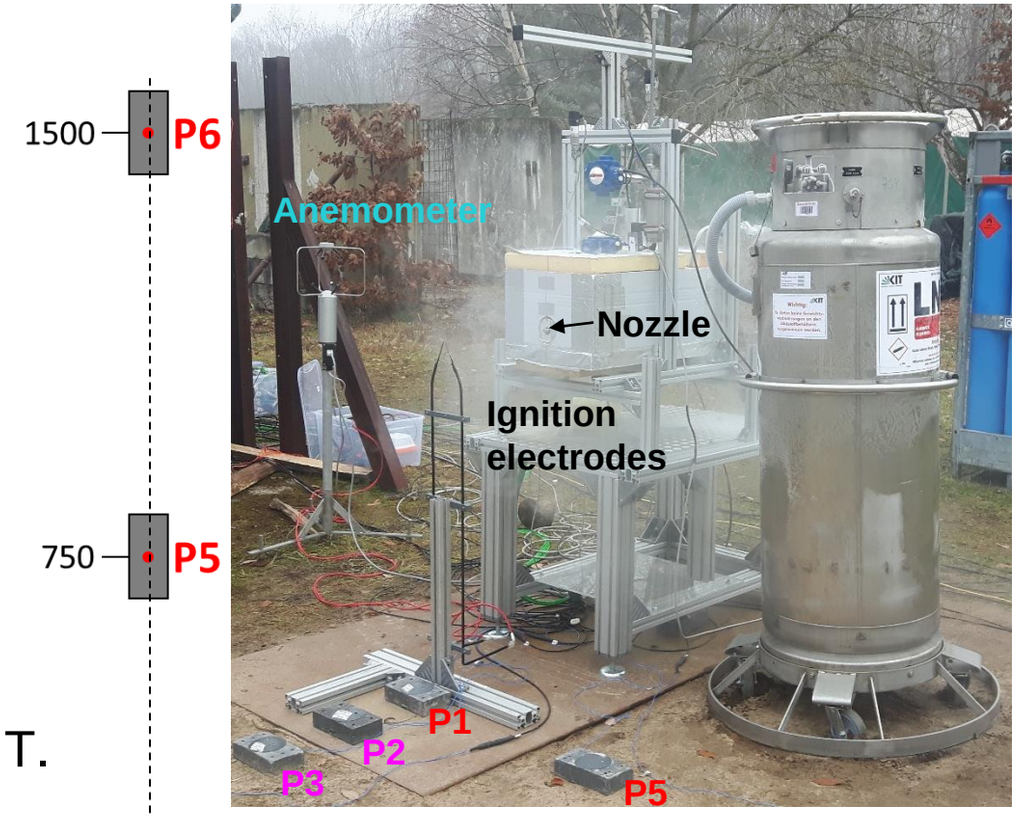

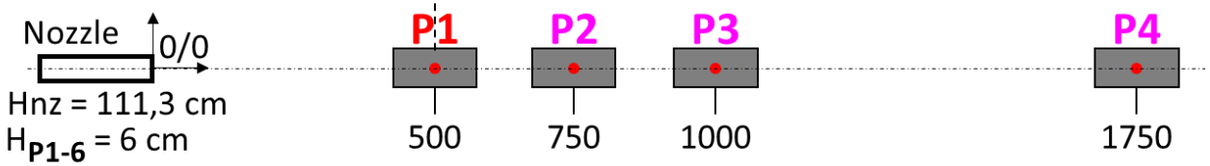

E5.1 Ignited jets (DisCha-Facility)

Data of Ignited DisCha Experiments

- **Signal Express Data** (similar to unignited tests)

Sheet	Content
20200130-131140-presV	Fast pressure record (in-Vessel, 2 kHz), Trigger
20200130-131140-pres	Slow pressure record (in-Vessel, 10 Hz), Trigger, Ambience
20200130-131140-TE	Temperatures (in-Vessel, 100 Hz), Trigger

- **Fast data acquisition system**
  - IMTEC T112-8 Data acquisition cards
    - Channels: 8/card
    - Range: ± 0.2 V .. 0 – 10 V
    - Measuring frequency: 100 kHz (10 µs)(all channels simultaneously)
    - Resolution: 12 Bit
    - Memory depth: 128 kS/channel

Sheet	Content
20200130-131140-DynPFast	Fast pressure record (**ex**-Vessel, 100 kHz), Sound-level, Trigger

E5.1 Ignited jets (DisCha-Facility)

Description of the DisCha-facility for ignited jets

- **Setup for Optical Observation**
  - Five cameras in operation during ignition experiments:
    - PHOTRON FastCAM SA 1.1 **(HS)**
      resolution: 1024 x 1024 pix; frame rate 1000 fps, 2000 fps, 5000 fps
      observation area in the jet plane is about 1.80 m x 1.80 m
    - Dalsa video camera **(DAL)**
      resolution 1400 x 1024 pix; frame rate 70 fps
      observation area in the jet plane is about 2.75 m x 2 m
    - CANON EOS5D Mark II **(C2)**
      resolution 5616 x 3744 pix
      the size of the observation area in the jet plane is about 3.80 m x 2.50 m
    - Thermocamera Flir T450 **(IR)**
      high resolution 464 x 348 pix

E5.1 Ignited jets (DisCha-Facility)

Description of the DisCha-facility for ignited jets

- **Test Setup and Optical Observation**
  - Two camera setups necessary due to different ignition distances

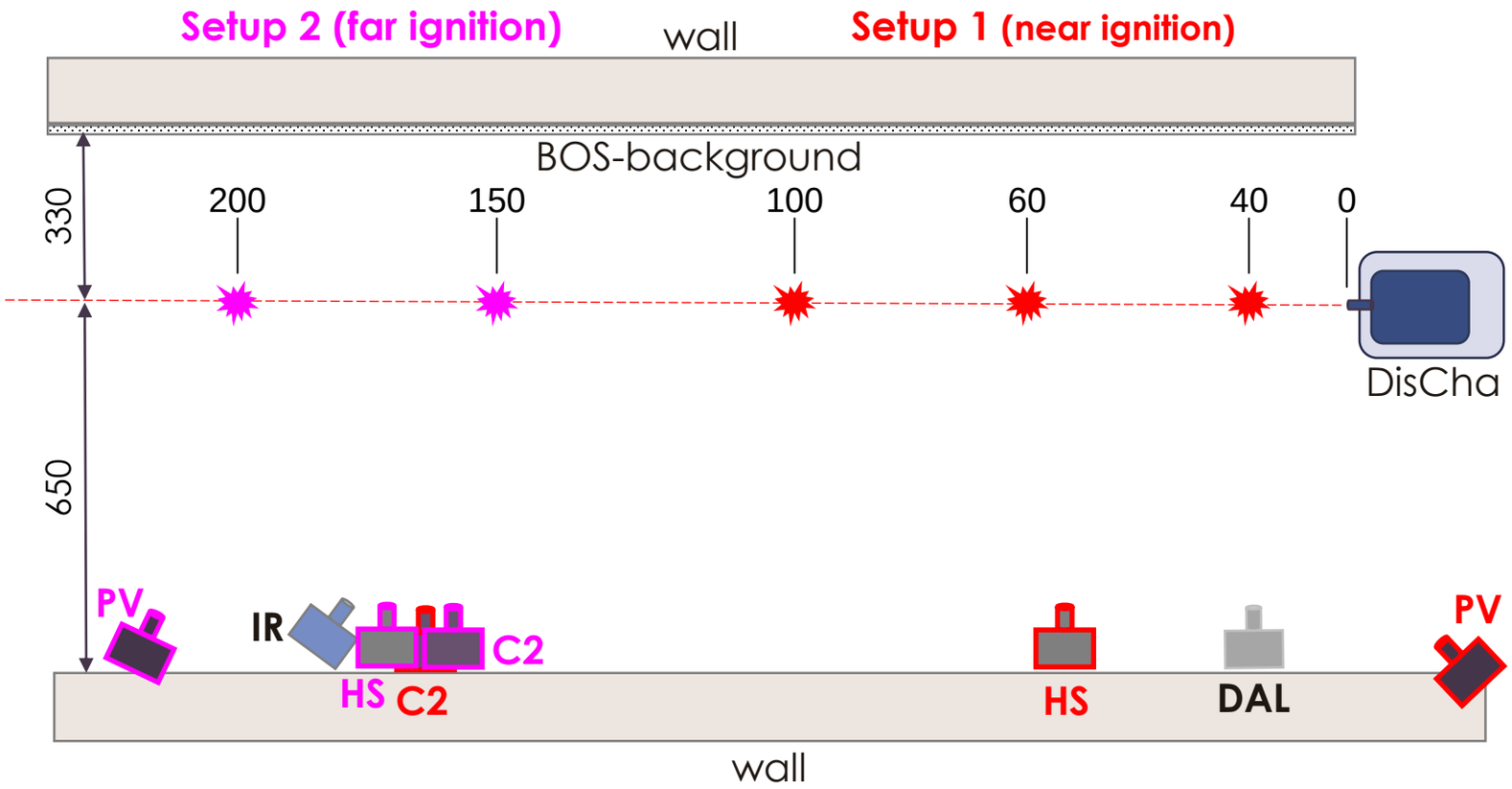

E5.1 Ignited jets (DisCha-Facility)

Description of the DisCha-facility for ignited jets

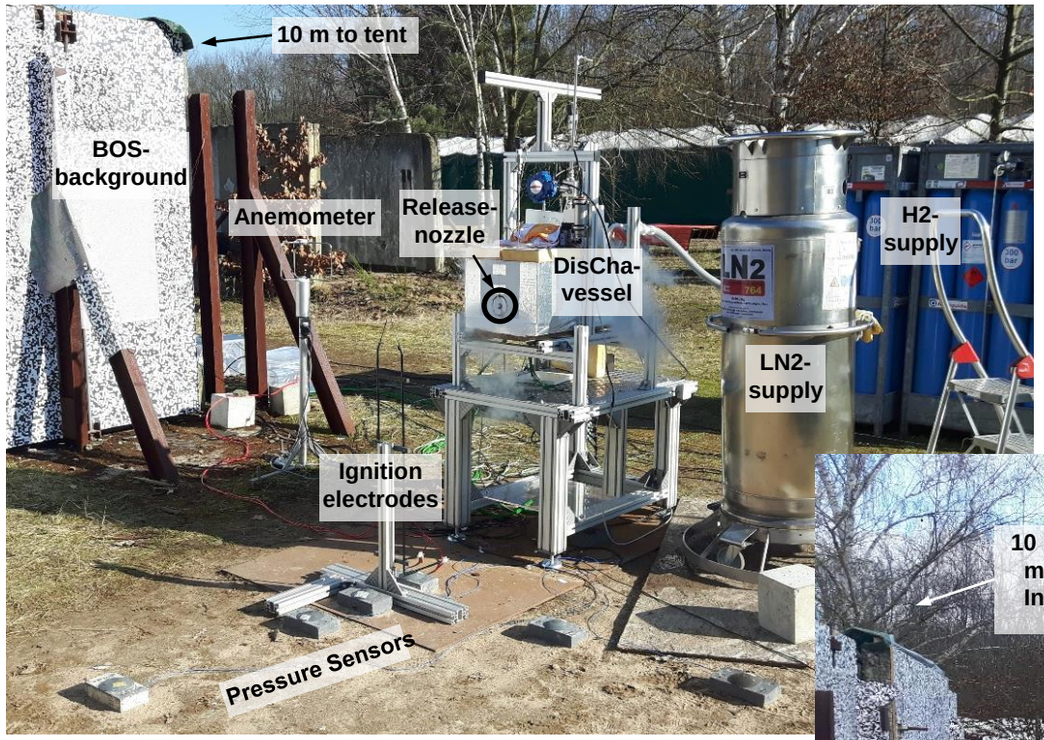

Impressions …

E5.1 Ignited jets (DisCha-Facility)

Description of the DisCha-facility for ignited jets

- **Course of the experiments / Test Matrix**
  - Possible variables to be investigated in the ignited DisCha experiments are:
    - nozzle diameter
    - ignition position
    - initial H2-pressure
    - ignition duration
    - initial temperature
    - ignition delay time
  - Too many variables to perform all combinations!
  - Reductions:
    - 3 nozzle diameters (1, 2, 4 mm),
    - 4 initial pressures (5, 50, 100, 200 bar),
    - 2 initial temperatures (approx. 80 and 280 K),
    - 5 ignition positions (distances 40, 60, 100, 150, 200 cm from nozzle on jet axis)
    - 1 ignition duration (1 s).

    lead to a set of 120 tests without varying the ignition delay time.
  - Variation of ignition delay time was investigated in **Initial Test Series**, where several parameters were randomly tested with different ignition delay times to determine the settings where maximum pressure loads are obtained.

E5.1 Ignited jets (DisCha-Facility)

Description of the DisCha-facility for ignited jets

- **Test Matrix Initial Test Series**

In the Initial Test Series 58 **warm** and 23 **cold** experiments were performed with the 2 mm nozzle.
Also 81 **warm** and 23 **cold** experiments with the 4 mm nozzle, including many repetitions.

D_{ign} [cm]	Del_{ign} [s]	Pini [bar] 5	50	100	200
			2 mm	Nozzle	
39,5	20		20191125-151441		
	40	20191127_135215 20191127_141717	20191125-152254	20191204-121203 20191204-122150	20191127-142839
	60		20191125-152935	20191204-123423	20191127-143250
	80		20191125-153549	20191204-124435	20191127-144341
	100			20191204-133102	20191127-145059
	150			20191204-134012	20191128-134102
	200			20191204-134915	20191128-135942
	250			20191204-141327	20191128-140929
	300			20191204-142423	20191128-141721
				20191204-143220	20191203-114802
	350				20191203-120602
62,5	20		20191125_132533		
	40	20191203-153707	20191125_131327 20191125_135347	20191204-144216	20191203-122520
	50		20191125_133536		
	60		20191121_162144 20191125_134400	20191204-145454	20191203-132915
	80		20191121_152508 20191121_155135	20191204-150707	20191203-133656
	100				20191203-134600
	150				20191203-135240
106,5	20		20191125-145505		
	40	20191203-153201	20191125-141847		20191203-140507
	60		20191125-142630		20191203-141431
	80		20191125-144347		20191203-142357
	100				20191203-143242
	150				20191203-144340
150	40	20191203-152700			20191203-145445
	60				20191203-150223
	80				20191203-151120
	100				20191203-151915

Red: no ignition

D_{ign} [cm]	Del_{ign} [s]	Pini [bar] 5	50	100	200
			2 mm	Nozzle	
39,5	40	20191205-150953		20191205-132820	20191205-135544
	60	20191205-151700		20191205-143401	
	80			20191205-144334	
	100			20191205-150025	
				20191206-131921	
	150			20191206-130513	
	200			20191206-132924	
	250			20191206-134011	
	300			20191206-135818	
	350			20191206-140905	
	400			20191206-141851	
	450			20191206-143106	
62,5	40	20191205-152826		20191206-115712	
	60			20191206-120507	
	80			20191206-121149	
	100			20191206-122002	
	150			20191206-122824	
	200			20191206-123751	
	300			20191206-125301	

D_{ign} [cm]	Del_{ign} [s]	Pini [bar] 5	50	100	200
			4 mm	Nozzle	
39,5	40		20200122-132201	20191216-134925	
				20191217-112651	
				20200116-112509	
	80		20200122-133055	20191216-153124	
				20191217-113554	
	120		20200122-133946	20191217-120314	
	160			20191217-1214xx	
	200			20191217-122241	
	250			20191217-123014	
	300		20200122-134711	20191217-123906	
	350			20191217-124632	
	500		20200122-135548	20191217-125646	
	700		20200122-140707		
			20200122-141358		
			20200122-142257		
62,5	40		20200122-143339	20191217-130952	
	80		20200122-144120	20191217-132250	
	120		20200122-144854	20191217-133511	
	160			20191217-134155	
	200			20191217-134652	
	250		20200122-145607	20191217-135505	
	300			20191217-140131	
	350		20200122-150421	20191217-1408xx	
				20191217-141513	
	500		20200122-151052		
	700		20200122-151710		
			20200122-152535		
106,5	40			20191217-143202	
	80			20191217-144038	
	120			20191217-144810	
	160			20191217-145442	
	200			20191217-150240	
	250			20191217-150929	
	300			20191217-151615	
	350			20191217-152355	

D_{ign} [cm]	Del_{ign} [s]	Pini [bar] 5	50	100	200
			4 mm	Nozzle	
150	40		20200108-133648	20200108-115753	
	80	20200108-145027	20200108-134419	20200108-120739	
	120		20200108-135309	20200108-121441	
	160		20200108-135918	20200108-1221xx	
				20200108-122803	
	200		20200108-140655	20200108-123452	
				20200108-1329xx	
	250		20200108-141400	20200108-125409	
	300		20200108-142029	20200108-130030	
	350		20200108-142924	20200108-130740	
	500		20200108-143522	20200108-132125	
			20200108-144315		
	700		20200122-153606	20200108-145646	
200	40			20200109-133118	
	80			20200109-134132	
				20200109-142658	
	120			20200109-134902	
	250			20200109-135517	
				20200109-143611	
				20200109-144253	
				20200109-145014	
	350			20200109-140226	
	500			20200109-140835	
	700			20200109-141519	
250	250			20200109-150024	

magenta: no SE-data

D_{ign} [cm]	Del_{ign} [s]	Pini [bar] 5	50	100	200
			4 mm	Nozzle	
39,5	40		20200123-123026	20200115-114956	
	80		20200123-123858	20200115-115919	
	120		20200123-124826	20200115-121153	
	120			20200115-130647	
	250		20200123-125601	20200115-122134	
				20200115-133015	
	350		20200123-130202	20200115-1232xx	
				20200115-123436	
				20200115-133902	
				20200115-1241xx	
	500		20200123-131439		
	700		20200123-132426		
			20200123-133357		
			20200123-134551		
	900		20200123-141529		
			20200123-142539		
62,5	50		~~20200123-143658~~		
			~~20200123-145951~~		

~~Strikethrough~~: frozen valve

E5.1 Ignited jets (DisCha-Facility)

Description of the DisCha-facility for ignited jets

- **Test Matrix Initial Test Series**
  - The highest overpressures were measured for ignition delay times in the range from approx. 80 ms to 160 ms,

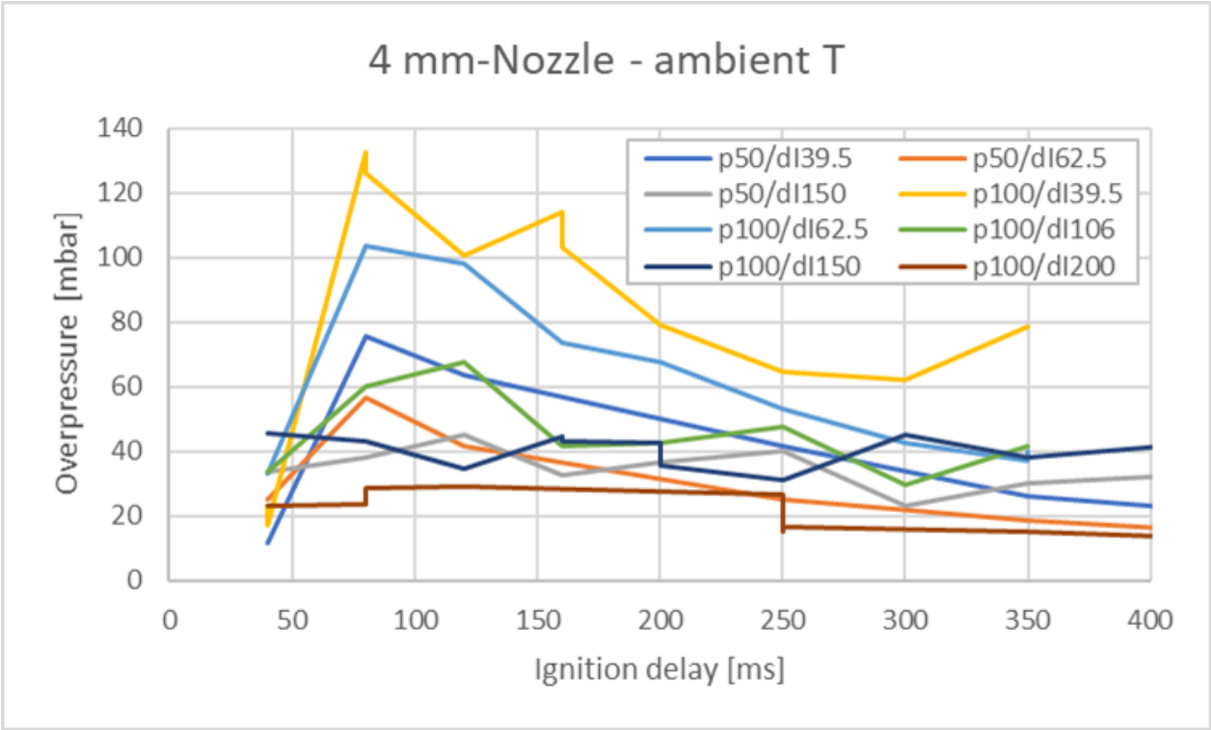

  - So for the second series an ignition delay of 120 ms was chosen.

E5.1 Ignited jets (DisCha-Facility)

Description of the DisCha-facility for ignited jets

- **Course of the experiments / Test Matrix 2nd Series**
  - In the second series experiments on almost the complete matrix were performed for both initial temperatures

p_{ini} [bar]	D_{ign} [cm]	Nozzle-Diameter [mm] 1	2	4
		Ambient Temperature		
5	39,5	20200130-153716	20200130-144952	20200130-130444
	62,5	20200206-153140	20200130-143504	20200130-131900
	106,5	20200206-154902	20200130-141220	20200130-134553
	150	omitted	omitted	20200206-120530
	200	omitted	omitted	20200206-122353
50	39,5	20200130-152936	20200130-144119	20200122-133946
	62,5	20200206-152140	20200130-142721	20200122-144854
	106,5	20200206-154446	20200130-140429	20200130-133910
	150	20200206-132310	20200206-133844	20200108-135309
	200	omitted	20200206-140450	20200206-141331
100	39,5	20200130-152108	*20191204-134012*	20191217-120314
	62,5	20200206-150830	20200130-142005	20191217-133511
	106,5	20200206-153635	20200130-135640	20191217-144810
	150	20200206-131405	20200206-133001	20200108-121441
	200	20200206-130852	20200206-135543	20200109-134902
200	39,5	20200130-144952	*20191128-134102*	20200130-125756
		20200130-151323		
	62,5	20200206-145930	*20191203-135240*	20200130-131140
	106,5	20200206-144550	*20191203-144340*	20200130-132602
	150	20200206-124728	20200206-124013	20200206-120820
	200	20200206-125639	20200206-123208	20200206-121550

italic: Ignition delay time 150 ms

p_{ini} [bar]	D_{ign} [cm]	Nozzle-Diameter [mm] 1	2	4
		LN2-Temperature		
5	39,5	~~20200207-151042~~	20200207-153955	20200131-142502
	62,5	~~20200207-144038~~	20200207-160600	20200131-135803
	106,5	~~20200207-135944~~	20200131-154849	20200131-132018
	150	omitted	20200205-152605	20200205-134450
	200	omitted	20200205-145649	20200205-130548
50	39,5	20200207-150146	20200207-153311	20200131-141755
	62,5	20200207-143044	20200207-155834	20200131-135150
	106,5	20200207-135241	20200131-154136	20200131-131215
	150	~~20200205-1633xx~~	20200205-151733	20200205-133707
	200	~~20200205-161205~~	20200205-144846	20200205-134450
100	39,5	20200207-145340	20200207-152622	20200131-141018
	62,5	20200207-141902	20200207-155033	20200131-133606
	106,5	20200207-134219	20200131-153321	20200131-125646
	150	20200205-162056	20200205-150947	20200205-132730
	200	20200205-160351	20200205-143856	20200205-124527
200	39,5	20200207-131000*	20200131-145042	20200131-120937
	62,5	20200207-125437*	20200131-150307	20200131-122212
	106,5	20200207-132715*	20200131-151413	20200131-124521
			20200131-152533	
	150	20200205-154145	20200205-142637	20200205-121045
	200	20200205-155209	omitted	20200205-123619

* As high as possible with used 300 bar bundle, but < 200 bar

E5.1 Ignited jets (DisCha-Facility)

- **Properties of Optical Observation**
- Panasonic Videocamera:
  - Overall observation (like security camera)

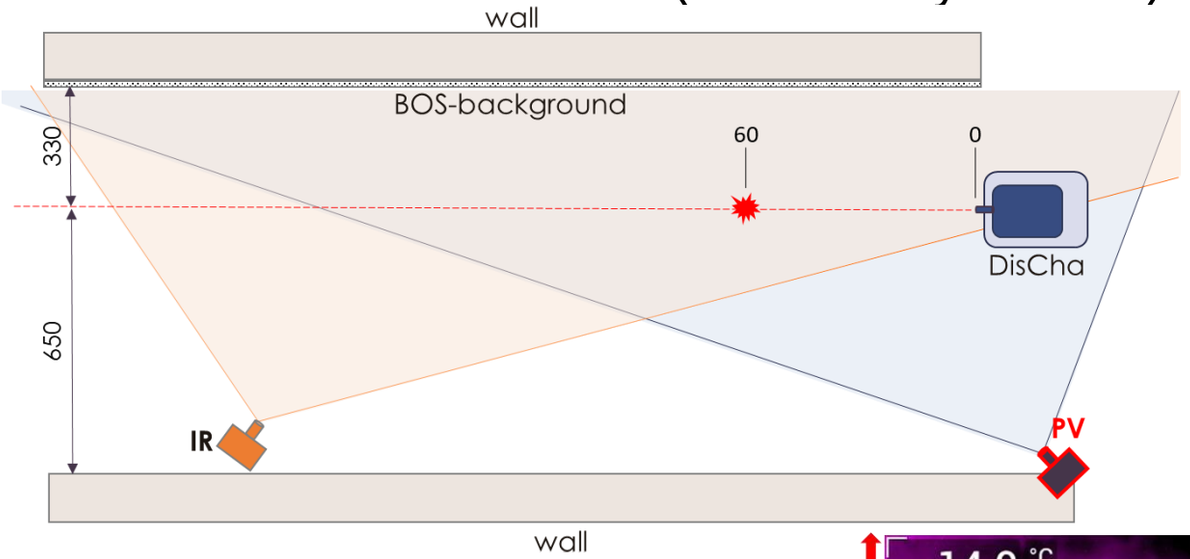

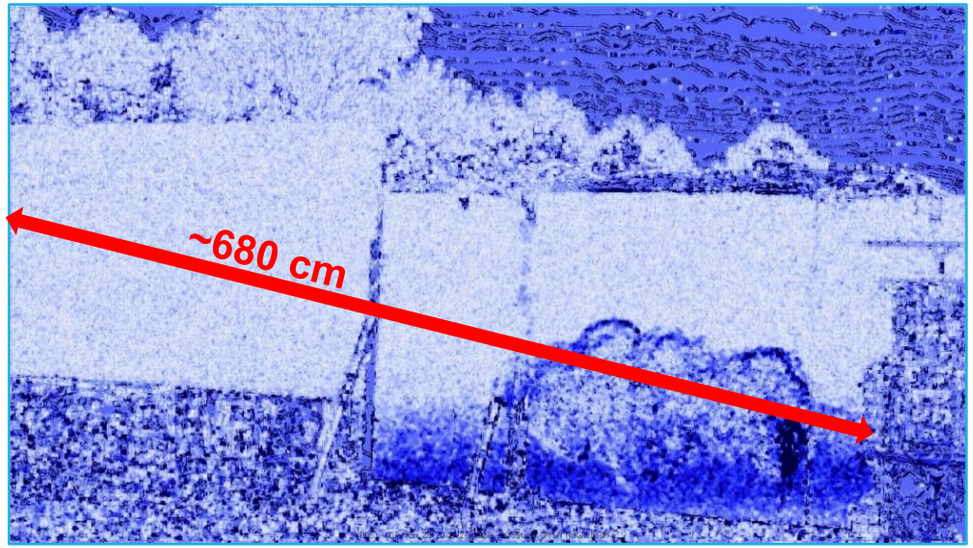

- Thermocamera:
  - Overall observation (and Flame visualization/ detection)

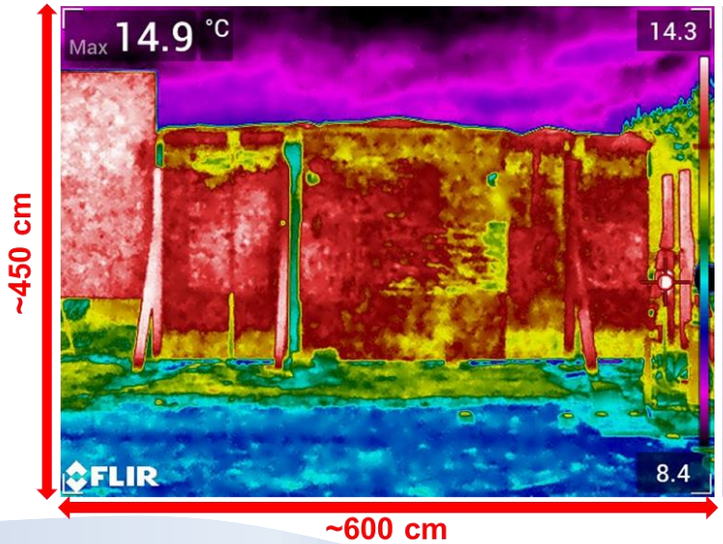

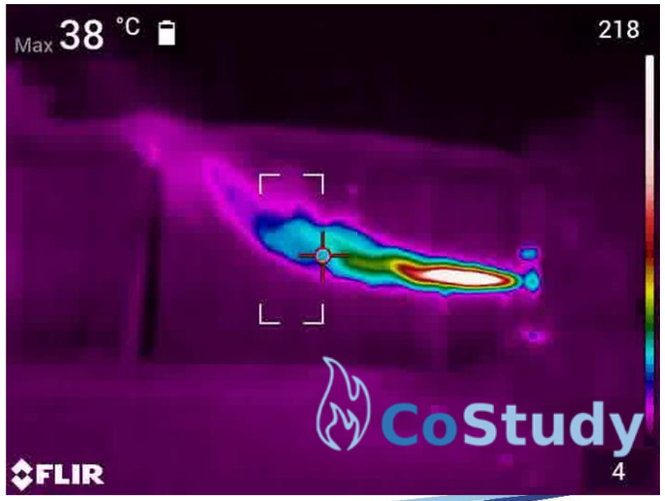

E5.1 Ignited jets (DisCha-Facility)

- **Properties of Optical Observation**

- CANON EOS5D Mark II:
  - Medium sized observation area
  - High quality images with detailed flame shape

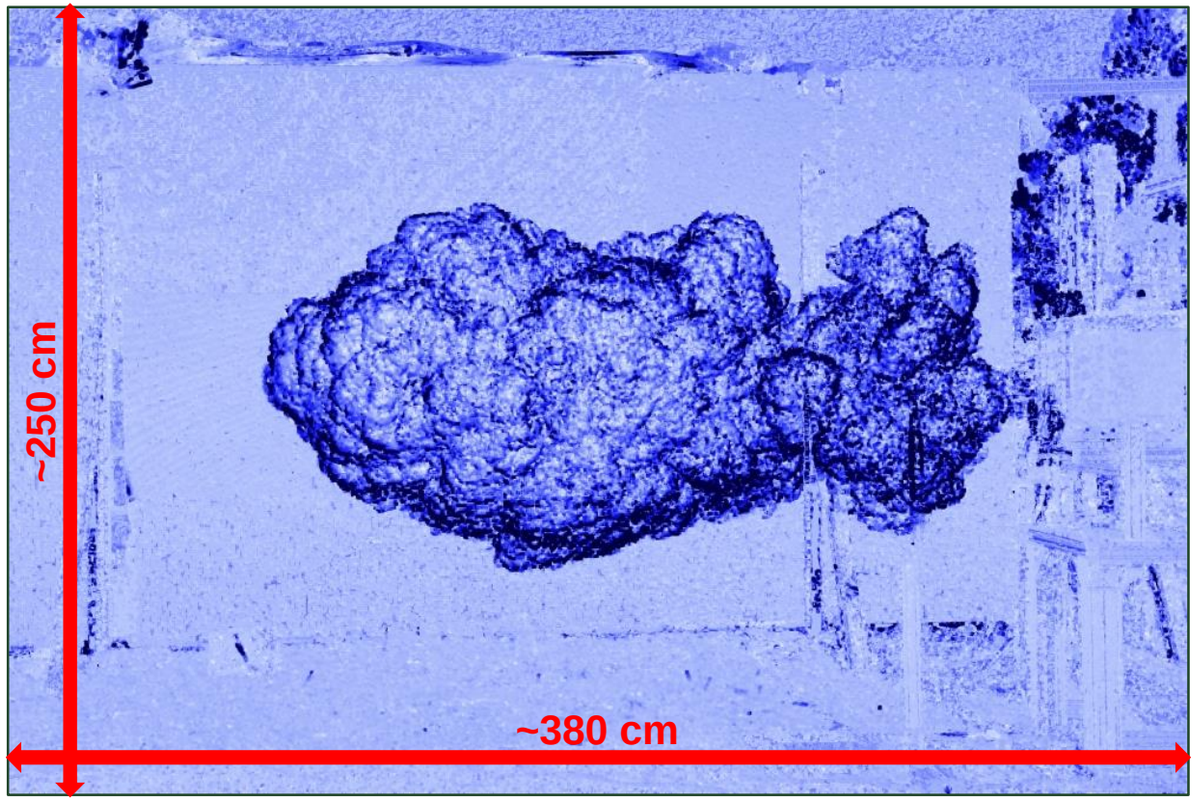

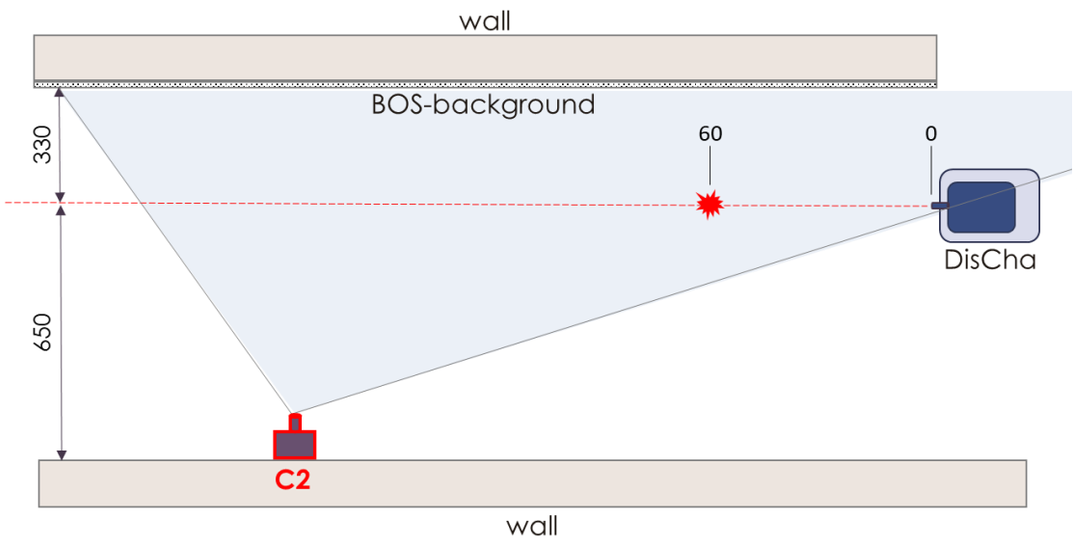

E5.1 Ignited jets (DisCha-Facility)

- **Properties of Optical Observation**

- PHOTRON High-Speed Camera:
  - Rather small sized observation area,
  - High time resolution with detailed flame shape,
  - Allows detailed identification of flame behavior.

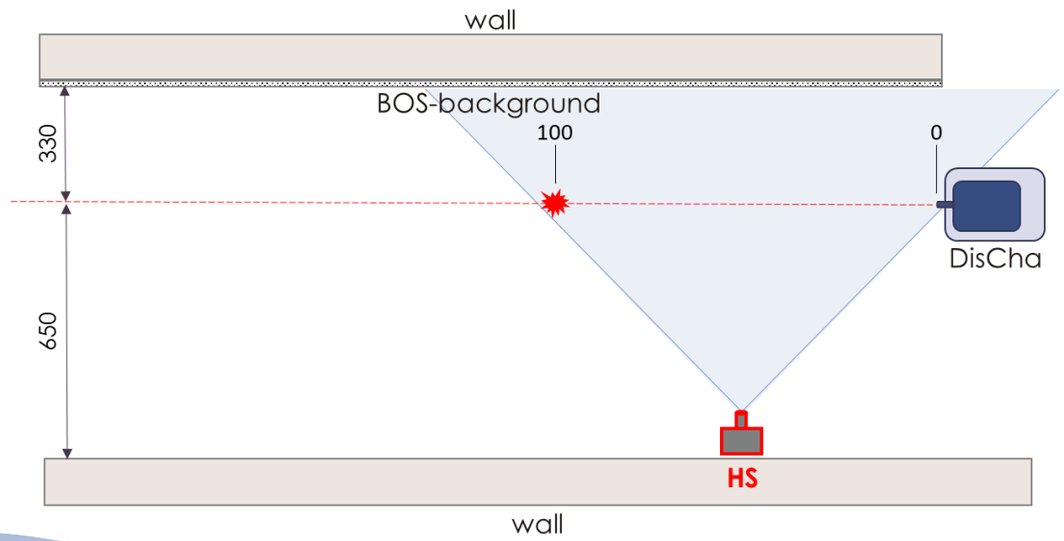

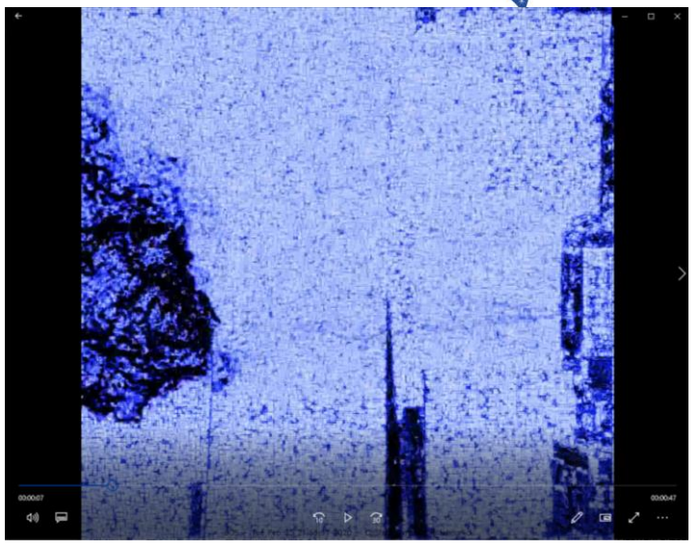

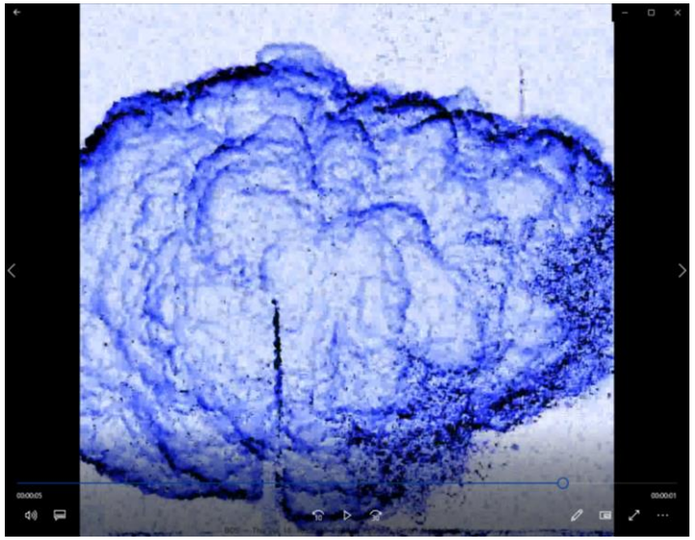

E5.1 Ignited jets (DisCha-Facility)

- **Properties of Optical Observation**

- Stemmer DALSA Camera:
  - Small to medium sized observation area
  - Higher time resolution (70 Hz) compared to regular video cameras,
  - Good performance for identification of flame behavior.

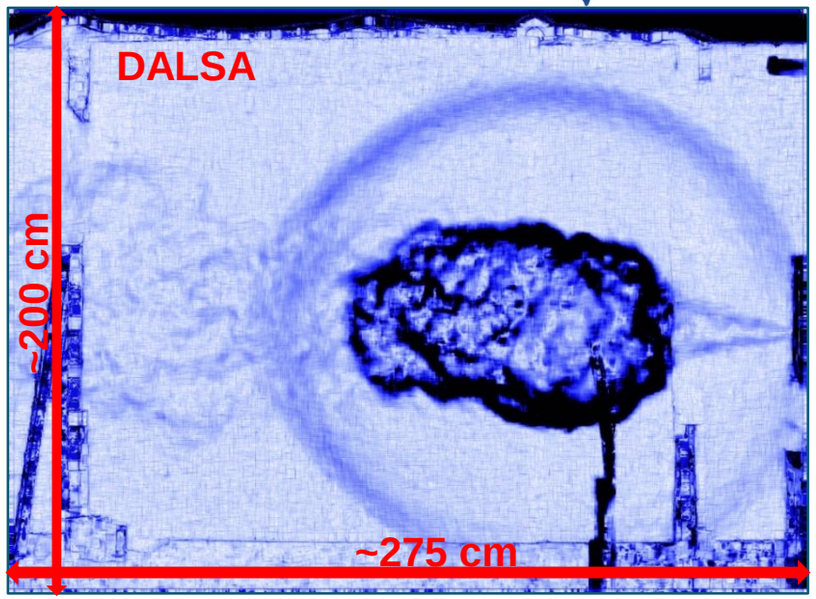

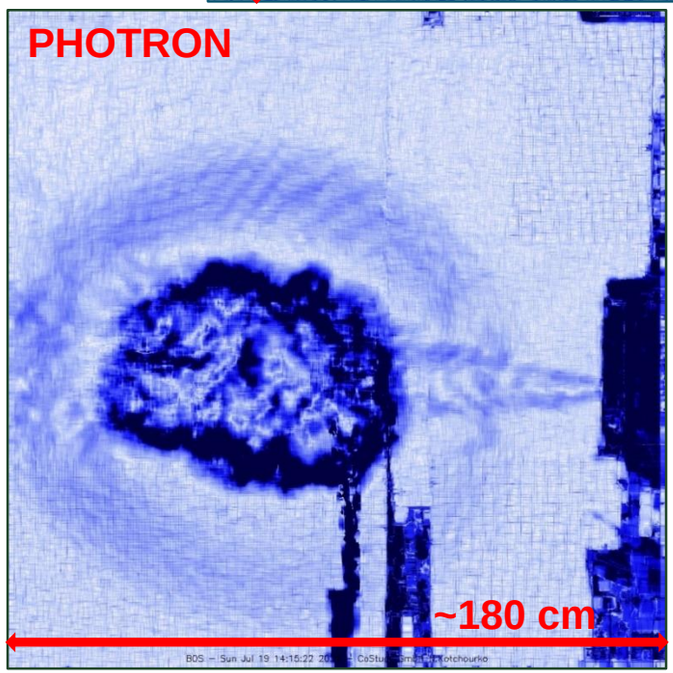

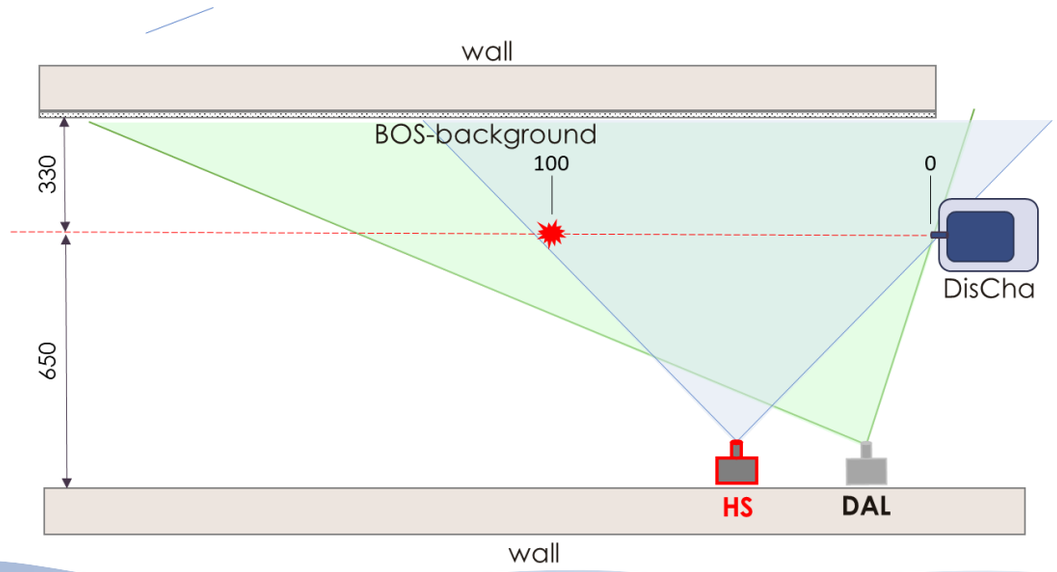

Thank you for your

Attention!